CONVECTION OVEN

MARATHONER GOLD
ELECTRIC, SINGLE DECK

Job _____ Item# _____

Standard Features

ES/10SC, ES/10CCH, EB/10SC, EB/10CCH

- ENERGY STAR® qualified (standard depth only)
- 11kW high efficiency heating elements
- Available standard and bakery depths
- Single deck convection oven is 55” in height (with optional casters)
- Patented “plug-in, plug-out” control panel - easy to service
- Stainless Steel front, sides and top
- Dependent doors with windows
- Coved, fastener-free, porcelain interior
- Heavy duty, cool touch, stainless steel door handle
- Soft Air, two speed, 1/2 hp, fan motor
- 11-position rack guides and 5 plated oven racks
- Electronic ignition with solid state temperature controls
- Forced cool down fan mode
- Oven “ready” light -cycles with burners
- Interior oven lights
- Stainless steel rear jacket

(ES/10SC shown with optional casters)

Available Controls

SC-Standard Controls
140°F to 500°F solid state thermostat and 60 minute mechanical cook timer.

CCH-Cycle / Cook & Hold Control
150°F to 500°F temperature controller with 140°F to 200°F “Hold” thermostat Dual digital display shows time and temperature. A fan cycle timer pulses the fan.

STANDARD CONSTRUCTION SPECIFICATIONS

Exterior Finish: Stainless steel front, top, sides and rear jacket.

Doors: Dependent doors with windows. Stainless steel construction, heavy-duty welded steel frame and 5/8” diameter full-length hinge pin.

Electrical System: Terminal connections are located below oven section and are accessible from the front of the oven. These sheath type electrical heating elements located at the rear of the oven function as a single heating unit with a combined rating of 11 kW. Available voltages include 208. 240, 380, and 480 VAC single or three phase, 50/60 Hz. Ovens equipped with 480VAC single or three phase heating elements use 240V controls and motors and do not require separate electrical lead wires.

Legs: 26” Stainless steel, triangular legs standard.

Rack and Rack Guides: Heavy-duty removable wire rack guides spaced on 1-5/8” centers offer 11 different rack positions. 5 wire racks provided with each oven.

Blower Fan and Motor: 1/2hp, 2-speed motor, 1725/1140 r.p.m

Oven Heating: Oven heating is regulated by an adjustable solid state thermostat control. Blower fan circulates air within the cavity “scrubbing” heat to the oven interior for even heat distribution within the cavity. Manual reset high limit temperature control protects the oven from overheat condition.

Control Panel: Located of front, at right side of oven, away from heat zone. Removable panel opens downward for easy servicing.

Note: Oven cannot be operated without fan in operation.

Models: ☐ES/10SC ☐EB/10SC ☐ES/10CCH ☐EB/10CCH

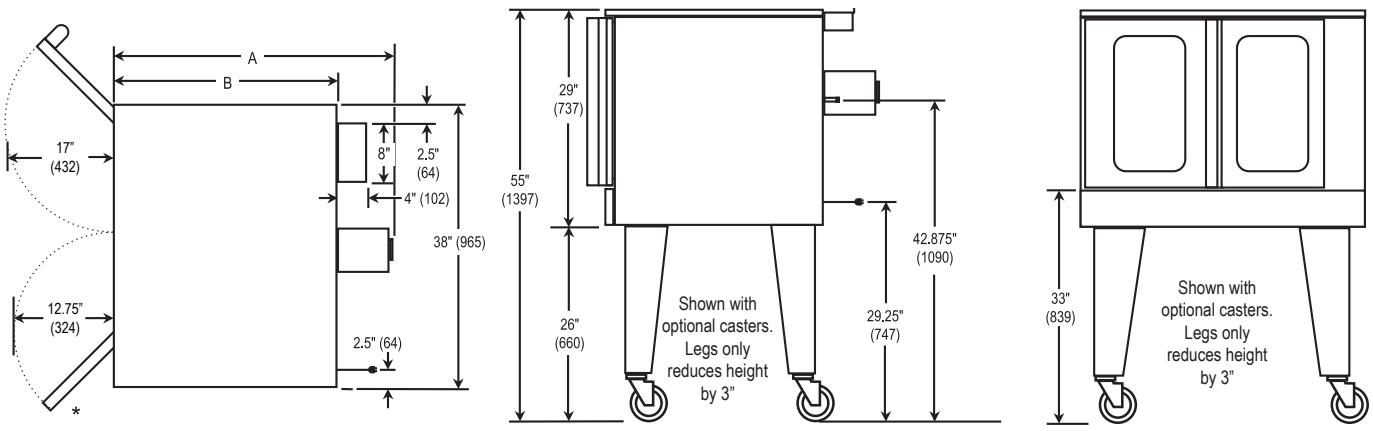

MODEL	Depth			Oven Interior			Rack Clearance		Shipping Crate				
	A	B		Width	Depth	Height	Width	Depth	Width	Depth	Height	Volume	Weight
ES/10	39.75" (1010)	30" (763)		29" (737)	22.5" (572)	20" (508)	28.25" (718)	22" (559)	55" (1399)	45.5" (1157)	45" (1143)	65.2 cu. ft. (1.85 cu. m.)	620 lbs (281.2 kg.)
EB/10	46.75" (1187)	36.38" (924)		29" (737)	28" (711)	20" (508)	28.25" (718)	27.25" (692)	55" (1399)	45.5" (1157)	45" (1143)	65.2 cu. ft. (1.85 cu. m.)	690 lbs (313.0 kg.)

Note: When shipped on legs, crated height is 69" (1753 mm)

UTILITY INFORMATION

Standard: 1/2 horseposer, 2 speed motor, 1725/1140 r. p. m.

Electrical Data		Amps per Line				
Each Oven	Voltage	1 Phase	3 Phase			
			X	Y	Z	Neut.
12 kW Heating Elements and Controls	208 VAC, 60Hz	58	34	34	31	0
	220/240 VAC, 50Hz	46	28	28	24	0
	240 VAC, 60Hz	50	30	30	26	0
	380/220 VAC, 50Hz	32	17	17	21	4
	415/240 VAC, 50Hz	50	15	15	19	4
	480 VAC, 60Hz	25	14	14	13	0

** All units shipped single phase. Single phase units are easily converted to three phase.*

MISCELLANEOUS

- Clearances from combustibles: Top, bottom, right, left side -0".
- Recommended - install under vented hood.
- Check local codes for fire and sanitary regulations.

NOTICE:
Southbend has a policy of continuous product research and improvement. We reserve the right to change specifications and product design without notice. Such revisions do not entitle the buyer to corresponding changes, improvements, additions or replacements for previously purchased equipment.

OPTIONS AND ACCESSORIES

- ❑ Stainless Steel oven interior
- ❑ Stainless Steel exterior bottom
- ❑ 6" stainless steel legs
- ❑ 208/240V 50/60 cycle (for use on 1 or 3 phase)
- ❑ Bolt-down flanged legs
- ❑ Swivel Caster - front with locks
- ❑ Knocked down packaging
- ❑ Export Crating
- ❑ Extra oven racks
- ❑ Down draft diverter for direct flue
- ❑ 3/4" quick disconnect with flexible hose (specify length: 3ft, 4ft, or 5ft)
- ❑ 2" air insulation panel (stainless steel only)

INTENDED FOR COMMERCIAL USE ONLY.
NOT FOR HOUSEHOLD USE.

1100 Old Honeycutt Road, Fuquay-Varina, NC 27526
(919) 762-1000 www.southbendnc.com