SOUTHBEND

A Middleby Company

ELECTRIC STEAM COMPARTMENT COOKER WITH CABINET BASE

Job _____ Item# _____

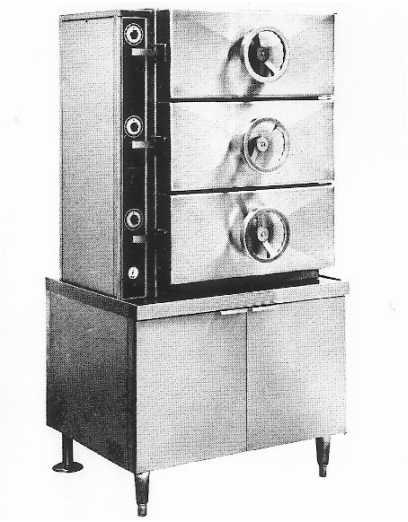

SPECIFICATIONS:

Shall be a Model_____ , pressure compartment cooker with electric steam boiler. The cooker shall be constructed of all-welded satin finish stainless steel, type 304. The doors shall have a removable inner liner of aluminum plate with full perimeter gasket seal, an outer liner of one-piece all-welded stainless steel, and a wheel-and-screw closing mechanism. The doors, with a clear opening of 10-1/4" x 26-3/8", shall latch upon closing and shall open 15° upon latch release. Compartment operation shall be at a maximum pressure of 6 psi *(41kPa).*

The control housing shall be constructed of stainless steel with a full-access removable panel. The timing of each compartment shall be independently controlled by:

☐ Automatic timer controls with visible and audible signals. At the end of the cooking cycle, the controls automatically shut off and exhaust the incoming steam, drain the condensate from the compartment, and sound a continuous signal until turned off manually.

Each cooking compartment shall have either removable shelf supports with one slide-out shelf (second shelf optional) or removable universal pan supports. The capacities shall range as follows:

☐ Shelf supports: Four full size *(1/1 gastronorm)* pans, 2-1/2" or 4" *(64mm or 100mm)* deep.

☐ Universal supports: Eight full size *(1/1 gastronorm)* pans, 2-1/2" *(64mm or 100mm)* deep, or four full size *(1/1 gastronorm)* pans, 4" *(100mm)* deep.

The compartment cooker shall be mounted on a cabinet base with full perimeter angle frame, reinforced counter and boiler mountings, electric boiler with controls which shall include the following as standard, automatic water level control, pressure gauge, water gauge glass, pressure control with secondary safety pressure control, air vent, safety relief valve and cathodic descaler. Thermostatically controlled cold water shall automatically condensate exhausted steam into water before releasing it to the drain. The cabinet shall be all stainless steel #4 finish type 304, hinged doors and 6" *(152mm)* stainless steel legs fitted with adjustable bullet feet on the front and flanged on the rear.

Model	Compartments	Capacity
EC-2	2	8-16 Pans
EC-3	3	12-24 Pans

OPERATION SHALL BE BY:

Electrically heated steam boiler operating at 15 psi *(103kPa)* and rated at 24 KW.

The boiler shall be equipped for operation on:

☐ 208 VAC, 3 Phase, 50/60 Hz
☐ 240 VAC, 3 Phase, 50/60 Hz

OPTIONAL ITEMS AT EXTRA COST:

☐ 36 KW
☐ 42 KW
☐ 220 VAC, 1 Phase, 50/60 Hz
☐ 220 VAC, 3 Phase, 50/60 Hz
☐ 380 VAC, 3 Phase, 50/60 Hz
☐ 415 VAC, 3 Phase, 50/60 Hz
☐ 480 VAC, 3 Phase, 50/60 Hz
☐ 415/240 VAC, 3 Phase, 4 wire
☐ 380/220 VAC, 3 Phase, 4 wire
☐ California code
☐ CSD-1
☐ Stainless steel rear panel
☐ Automatic blow down
☐ Front flange feet
☐ Split water lines

ACCESSORIES:

☐ Extra shelf
☐ 12" x 20" x 2-1/2" perforated stainless steel pan
☐ 12" x 20" x 2-1/2" solid stainless steel pan
☐ 12" x 20" x 4" perforated stainless steel pan
☐ 12" x 20" x 4" solid stainless steel pan
☐ Steam take-off kit
☐ Deliming kit
☐ Ball float trap
☐ Water in "Y" strainer
☐ Spray and rinse assembly

Models: ☐ EC-2S ☐ EC-3S

SERVICE CONNECTIONS

- ELECTRICAL CONNECTION: 1/2" conduit connection to controls. 2 AMPS per compartment, 120-60-1 or 220-50-1.
- COLD WATER: 3/8" O.D. tubing at 25-50 PSI *(170 - 345kPa).*
- DRAIN: 2" IPS piped to open floor drain. No solid connection.
- STEAM TAKE-OFF CONNECTION: 3/4" IPS optional to operate adjacent equipment.

WATER QUALITY STATEMENT

Water quality is the major factor affecting the performance of your appliance. If you are unsure of water quality, consult a local water treatment specialist and have the water analyzed. Your water supply must be within these general guidelines:

Total dissolved solids	Less than 60 PPM
Total alkalinity	Less than 20 PPM
Silica	Less that 13 PPM
Chlorine	Less than 1.5 PPM
pH Factor	7.0 - 8.5

Water which fails to meet these standards should be treated by installation of water conditioner.

FAILURE OR MALFUNCTION OF THIS APPLIANCE DUE TO POOR WATER QUALITY IS NOT COVERED UNDER WARRANTY.

ELECTRICAL CHARACTERISTICS

		208V		220V		240V		380V		415V		480V	
MODEL	**PH**	**KW**	**AMP**	**KW**	**AMP**	**KW**	**AMP**	**KW**	**AMP**	**KW**	**AMP**	**KW**	**AMP**
EC-2	3	24	66.6	24	62.9	24	57.7	24	36.5	24	33.4	24	28.9
OR	3	36	99.9	36	94.5	36	86.6	36	54.7	36	50.1	36	43.3
EC-3	3	42	116.6	42	110.2	42	101	42	63.8	42	58.4	42	50.5

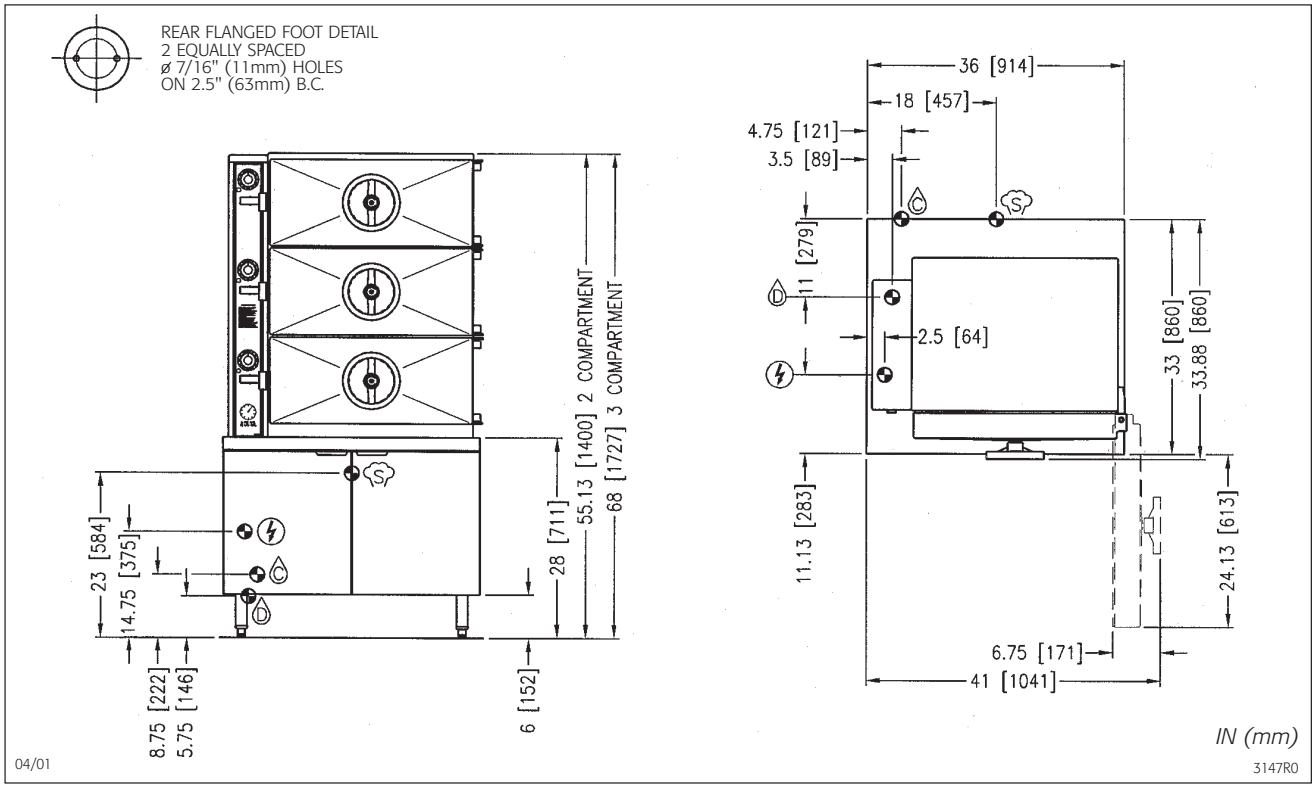

INTENDED FOR COMMERCIAL USE ONLY.
NOT FOR HOUSEHOLD USE.

SOUTHBEND

1100 Old Honeycutt Rd., Fuquay-Varina, NC 27526
www.southbendnc.com