SOUTHBEND

A Middleby Company

DIRECT STEAM COMPARTMENT COOKER WITH CABINET BASE

Job _____ Item# _____

Model	Compartments	Capacity
DC-2	2	8-16 Pans
DC-3	3	12-24 Pans

SPECIFICATIONS:

Shall be a Model_____ , pressure compartment cooker operating on direct steam. The cooker shall be constructed of all-welded satin finish stainless steel, type 304. The doors shall have a removable inner liner of aluminum plate with full perimeter gasket seal, and a wheel-and-screw closing mechanism. The doors, with a clear opening of 10-1/4" x 26-3/8" *(260 x 670mm)*, shall latch upon closing, and shall open 15° upon latch release. Compartment operation shall be at a maximum pressure of 6 psi *(41kPa)*.

The control housing shall be constructed of stainless steel with a full-access removable panel. The timing of each compartment shall be independently controlled by:

- ☐ Automatic timer controls with visible and audible signals. At the end of the cooking cycle, the controls automatically shut off and exhaust the incoming steam, drain the condensate from the compartment, and sound a continuous signal until turned off manually.

Each cooking compartment shall have either removable shelf supports with one slide-out shelf (second shelf optional) or removable universal pan supports. The capacities shall range as follows:

- ☐ Shelf supports: Four full size *(1/1 gastronorm)* pans, 2-1/2" or 4" *(64mm or 100mm)* deep.

The compartment cooker shall be mounted on a cabinet base with full perimeter angle frame, reinforced counter, all stainless steel #4 finish type 304 exterior, hinged doors and 6" *(152mm)* stainless steel legs with adjustable bullet feet on the front and flanged on the rear.

OPERATION SHALL BE BY:

Direct non-toxic steam incoming at a minimum of 15 psi *(103 kPa)* with a flow of 150 psi *(68kg)* per hour. A pressure reducing valve shall provide compartment pressure of 6 psi *(41 kPa)* and a control system is provided to cool the condensate drain.

The control shall be equipped for operate on 115 VAC, 1 Phase 60 Hz.

OPTIONAL ITEMS AT EXTRA COST:

- ☐ Stainless steel rear panel
- ☐ Front flange feet
- ☐ 220 VAC, 1 Phase, 60 Hz
- ☐ 240 VAC, 1 Phase, 60 Hz

ACCESSORIES:

- ☐ Extra shelf
- ☐ 12" x 20" x 2-1/2" perforated stainless steel pan
- ☐ 12" x 20" x 2-1/2" solid stainless steel pan
- ☐ 12" x 20" x 4" perforated stainless steel pan
- ☐ 12" x 20" x 4" solid stainless steel pan
- ☐ Ball float trap
- ☐ Spray and rinse assembly

Models: ☐ **DC-2S** ☐ **DC-3S**

SERVICE CONNECTIONS

– ELECTRICAL CONNECTION: 1/2" conduit connection to controls. 2 AMPS per compartment, 120-60-1 or 220-50-1.

– DRAIN: 2" IPS piped to open floor drain. No solid connection.

– STEAM SUPPLY: 3/4" IPS for incoming steam at 40-50 PSI *(276-345 kPa)*.*

*Pressure reducing valve is required if incoming pressure exceeds 50 PSI *(345 kPa)*.

DC-2, DC-3

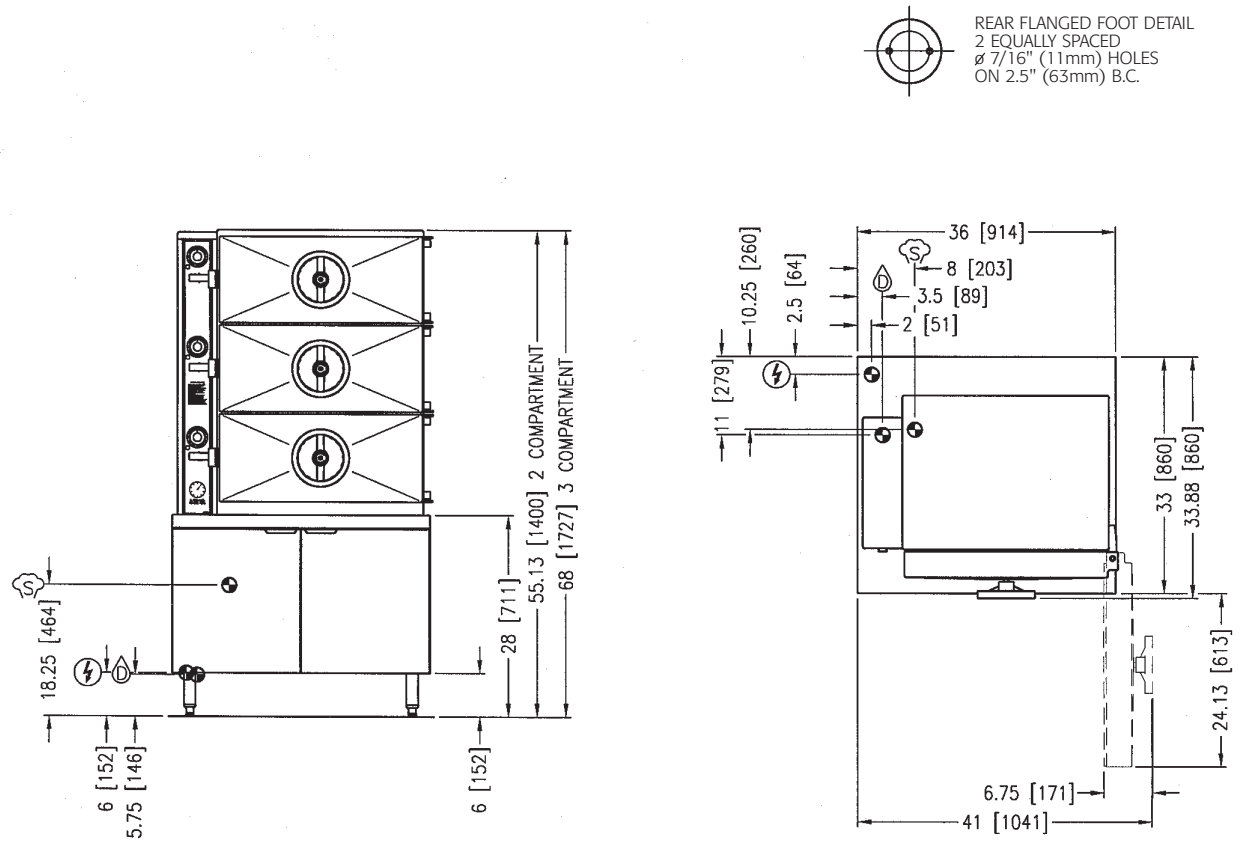

IN (mm)

04/01

3146R1

INTENDED FOR COMMERCIAL USE ONLY.
NOT FOR HOUSEHOLD USE.

SOUTHBEND

1100 Old Honeycutt Rd., Fuquay-Varina, NC 27526
www.southbendnc.com