SOUTHBEND

A Middleby Company

GAS OPERATED STEAM GENERATOR

Job _____ Item# _____

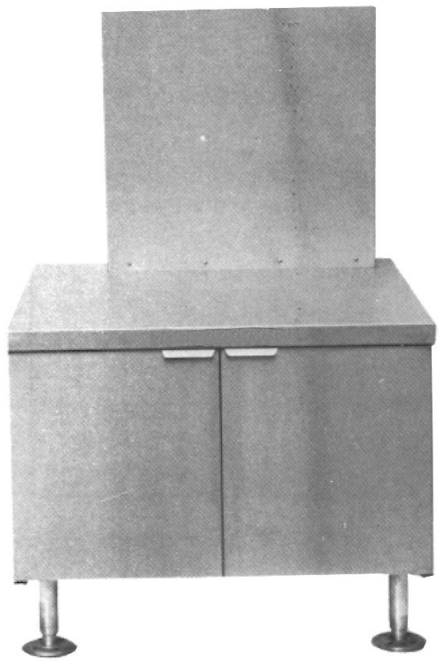

Model	Width	BTU
CG-14S	24”	140,000
CG-20S	24”	200,000
CG-314S	36”	140,000
CG-320S	36”	200,000
CG-325S	36”	250,000
CG-330S	36”	300,000

SPECIFICATIONS:

Shall be a Model _____ , gas fired steam boiler suitable for operation at any pressure from 5-15 psi *(34-103 kPa)* and to operate on 115 VAC. Boiler shall be mounted in a cabinet base:

- ☐ 24" *(610 mm)* wide 140,000 or 200,000 BTU.
- ☐ 36" *(914 mm)* wide 200,000, 250,000 or 300,000 BTU

Polished #4 finish stainless steel cabinet base shall be modular design to match other Crown cooking equipment. Shall be equipped with 6" *(152 mm)* stainless steel legs fitted with adjustable bullet feet, reinforced stainless steel counter top, and hinged doors with magnetic latches. All piping shall be confined within cabinet.

Unit shall include the following as standard: automatic water level control, pressure gauge, water gauge glass, pressure control with secondary safety pressure control, safety relief valve and cathodic protector.

Thermostatically controlled cold water shall automatically condensate exhausted steam into water before releasing it to the drain.

OPERATION SHALL BE BY:

Gas operated 15 psi *(103 kPa)* steam boiler operating on 115 VAC:

- ☐ Natural Gas
- ☐ L.P. Gas
- ☐ 140,000 BTU
- ☐ 200,000 BTU
- ☐ 250,000 BTU
- ☐ 300,000 BTU

OPTIONAL ITEMS AT EXTRA COST:

- ☐ 220 VAC operation
- ☐ 240 VAC operation
- ☐ Pressure reducing valve
- ☐ Electronic ignition
- ☐ California code
- ☐ CSD-1
- ☐ Automatic boiler blow down
- ☐ Stainless steel rear panel
- ☐ Front flanged feet
- ☐ Rear flanged feet
- ☐ Split water line
- ☐ Correctional package

ACCESSORIES:

- ☐ Steam take off kit
- ☐ Ball float trap
- ☐ De-liming kit (DPA-1)
- ☐ Water in “Y” strainer

Models: ☐ CG-14S ☐ CG-20S ☐ CG-314S ☐ CG-320S ☐ CG-325S ☐ CG-330S

SERVICE CONNECTIONS

– Unless otherwise specified, Field Wire Electrical Connection to be 120 Volts, 60 Hertz single phase with grounding wire.

– DRAIN: 2" IPS piped to open floor drain. No solid connection.

– COLD WATER: 3/8" O.D. tubing at 25-50 PSI *(170 - 345kPa)*.

– GAS CONNECTION: 3/4" IPS supply line required.
Natural Gas: min. 7" (178 mm) Water Column. Propane: min. 11" (279 mm) Water Column.

– STEAM TAKE-OFF CONNECTION: 3/4" IPS.

WATER QUALITY STATEMENT

Water quality is the major factor affecting the performance of your appliance. If you are unsure of water quality, consult a local water treatment specialist and have the water analyzed. Your water supply must be within these general guidelines:

Total dissolved solids	Less than 60 PPM
Total alkalinity	Less than 20 PPM
Silica	Less that 13 PPM
Chlorine	Less than 1.5 PPM
pH Factor	7.0 - 8.5

Water which fails to meet these standards should be treated by installation of water conditioner.

FAILURE OR MALFUNCTION OF THIS APPLIANCE DUE TO POOR WATER QUALITY IS NOT COVERED UNDER WARRANTY.

DIMENSIONS

MODEL	BTU/HR	UNITS	A	B	C	D	E	F	G	H	J	K	L	M
CG-(2,3,4)14	140,000	inches	8.75	5.75	13.5	24	5.75	3.5	5	11	4.75	2.5	3	12.5
CG-220	200,000	*mm*	*222*	*146*	*343*	*610*	*146*	*89*	*127*	*279*	*121*	*64*	*76*	*318*
CG-320	200,000	inches					8		6		6.75			6
CG-325	250,000	*mm*					*203*		*152*		*171*			*152*
CG-330	300,000													

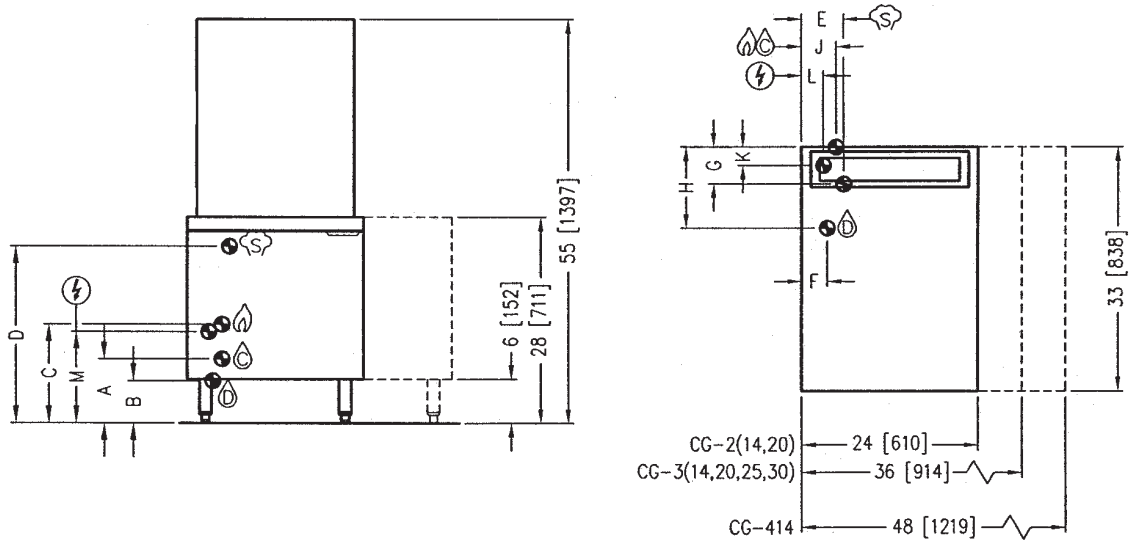

IN (mm)

10/01

7160R0

INTENDED FOR COMMERCIAL USE ONLY.
NOT FOR HOUSEHOLD USE.

SOUTHBEND

1100 Old Honeycutt Rd., Fuquay-Varina, NC 27526
www.southbendnc.com