SOUTHBEND

A Middleby Company

DIRECT STEAM COMPARTMENT COOKER

LEG, PEDESTAL OR WALL MOUNT

Job _____ Item# _____

Model	Compartments	Capacity
DC (P,L or W)-2	2	8-16 Pans
DC (P,L or W)-3	3	12-24 Pans

The compartment cooker shall be mounted on:

- ☐ A pedestal base constructed of stainless steel with bolt down plate for securing to the floor.
- ☐ A stainless steel tubular frame base, legs fitted with adjustable bullet feet on the front and flanged adjustable feet on the rear for securing to the floor.
- ☐ Wall brackets constructed of stainless steel. (Consult factory for details.)

SPECIFICATIONS:

Shall be a Model_____ , pressure compartment cooker operating on direct steam. The cooker shall be constructed of all-welded type 304 #4 finished stainless steel. The doors shall have a removable inner liner of aluminum plate with full perimeter gasket seal, an outer liner of one piece welded stainless steel, and a wheel and screw closing mechanism. The doors with a clear opening of 10-1/4" x 26-3/8" *(260 mm x 670 mm)* shall latch upon closing and open 15° upon latch release.

Compartment operation shall be at a maximum pressure of 6 psi *(41 kPa)*

The control housing shall be constructed of #4 finish stainless steel with a full-access removable panel. The timing of each compartment shall be independently controlled by an automatic timer control with visible and audible signals. At the end of the cooking cycle, the controls automatically shut off and exhaust the incoming steam, drain the condensate from the compartment, and sounds a continuous signal until turned off manually. Each cooking compartment shall be standard with universal pan supports.

OPERATION SHALL BE BY:

Direct non-toxic steam, incoming at a minimum of 15 psi *(103 kPa)* with a flow of 150 psi *(68 kg)* per hour. A pressure reducing valve shall provide compartment pressure of 6 psi *(41 kPa)* and a control system is provided to cool the condensate drain.

The controls shall be equipped for operation on:

- ☐ 115 VAC, 1 Phase, 60 Hz

OPTIONAL ITEMS AT EXTRA COST:

- ☐ 220 or 240 VAC operation (specify voltage)
- ☐ Stainless steel frame
- ☐ Stainless steel rear panel
- ☐ Load compensate timer
- ☐ Front flanged feet
- ☐ Correctional package

ACCESSORIES:

- ☐ Shelf support
- ☐ Ball float trap
- ☐ Spray and rinse assembly

C US

Models: ☐ DCL-2 ☐ DCL-3 ☐ DCL-4 ☐ DCP-2 ☐ DCP-3 ☐ DCW-2 ☐ DCW-3

SERVICE CONNECTIONS

– STEAM SUPPLY: 3/4" *(19 mm)* IPS at min. 40 to max. 50 PSI *(2.8 to 3.5 kg/cm²)*.

– DRAIN: 2" *(51 mm)* IPS piped to open floor drain. No solid connection.

– ELECTRICAL CONNECTION: 1/2" *(13 mm)* conduit connection to controls. 2 Amps per compartment, 120-60-1 or 220-50-1.

DIMENSIONS

MODEL	UNITS	A	B	C	D	E	F	G	H	J	K	L	M	N	O
DC-(P-L)-2	inches	34.25	6	30	23.5	28	55		22	20	2	7	6	4	3
	mm	*870*	*152*	*762*	*597*	*711*	*1397*		*559*	*510*	*51*	*175*	*152*	*102*	*76*
DC-(P-L)-3	inches	34.25	6	30	23.5	28		68	12	10	2	7	6	4	3
	mm	*870*	*152*	*762*	*597*	*711*		*1727*	*304*	*254*	*51*	*175*	*152*	*102*	*76*

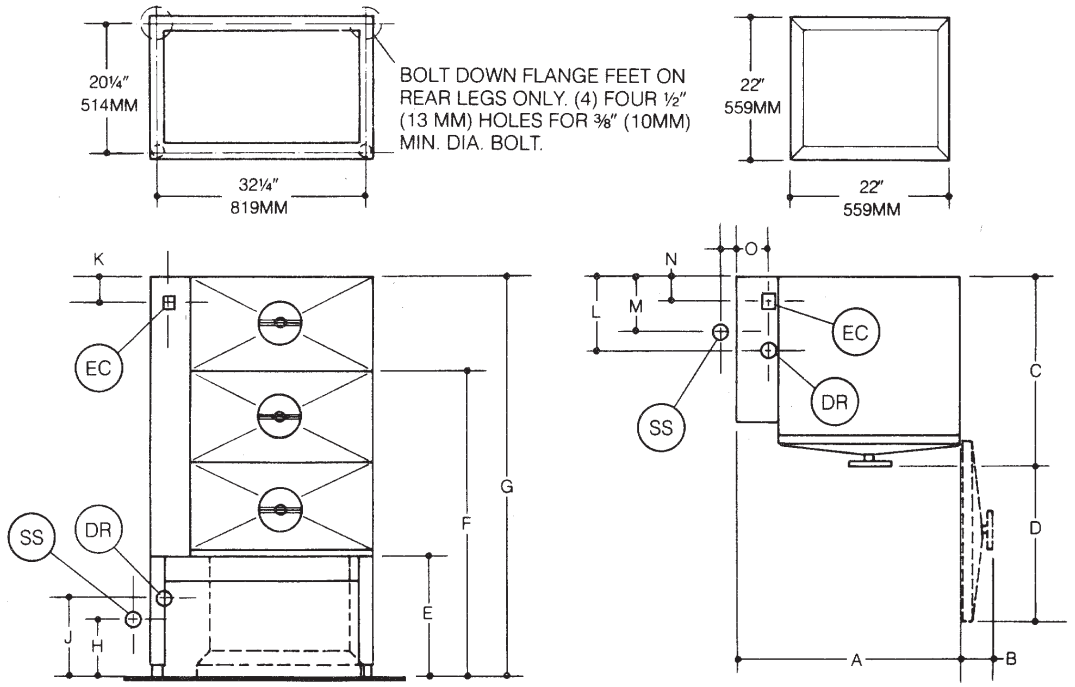

IN (mm)

04/02

INTENDED FOR COMMERCIAL USE ONLY.
NOT FOR HOUSEHOLD USE.

SOUTHBEND

1100 Old Honeycutt Rd., Fuquay-Varina, NC 27526
www.southbendnc.com