SOUTHBEND

A Middleby Company

DIRECT STEAM COUNTER TILTING KETTLE

Job _____ Item# _____

DC-6 Shown with optional steam control valve.

Model	Capacity	
KDCT-6	6 Gallon	19 Litre
KDCT-10	10 Gallon	38 Litre
KDCT-12	12 Gallon	46 Litre
KDCT-20	20 Gallon	76 Litre

SPECIFICATIONS:

Shall be a Model _____ , direct connected, steam, counter top tilting kettle. A double wall kettle interior shall form a steam jacket around the lower 2/3 of the kettle. The bottom of the kettle shall be of hemispheric design for superior heat transfer.

The tubular stainless steel mounting legs shall have the steam supply and condensate return pipes completely concealed within the leg members. The sealed stainless steel tilt mechanism bearings shall permit the kettle to tilt forward 90° for complete emptying. A removeable operating handle with heat-proof knob shall be mounted on the left or right. All models shall have a single support leg with nylon insert. Construction shall be all welded satin finish stainless steel, type 304. Standard features include type 316 stainless steel liner for use with high acid content products.

OPERATION SHALL BE BY:

Direct steam at a minimum of 5 PSI *(34 kPa)* and a maximum of 50 PSI *(345 kPa).*

STANDARD FEATURES:

- ☐ Reversible tilt handle
- ☐ Type 316 stainless steel liner

OPTIONAL ITEMS AT EXTRA COST:

- ☐ One piece lift off stainless steel cover
- ☐ Stainless steel perforated basket.
- ☐ Etched gallon markings
- ☐ Etched liter markings

ACCESSORIES:

- ☐ 18" high floor stand with sliding drain pan
- ☐ Steam control valve (SCV-1) mounted in leg
- ☐ Steam control assembly (STA-3) consisting of line strainer, steam trap and safety valve

Models: ☐ KDCT-6 ☐ KDCT-10 ☐ KDCT-12 ☐ KDCT-20

SERVICE CONNECTIONS

(S) – STEAM SUPPLY: 1/2" IPS *(13 mm)*

(R) – CONDENSATE RETURN: 1/2" IPS *(13 mm)*

DIMENSIONS

MODEL	CAPACITY	UNITS	A	B	C	D	E	F	G	H	J	K	L	M	N	O	P	Q
KDCT-6	6 U.S. gal.	inches	12	14.5	19.5	13.75	5	7.5	15.12	8.5	12.25	10.38	30.25	4	4.38	30.75	0	15.75
	23 liters	*mm*	*305*	*368*	*495*	*349*	*127*	*191*	*384*	*216*	*311*	*264*	*768*	*102*	*111*	*781*	*0*	*400*
KDCT-10	10 U.S. gal.	inches	16	15	18.5	13.75	7	7.75	19.12	9	16.25	8.88	32.25	2.38	4.88	29.75	0	15.75
	38 litres	*mm*	*406*	*381*	*470*	*349*	*178*	*197*	*486*	*229*	*413*	*225*	*819*	*60*	*124*	*756*	*0*	*400*
KDCT-12	12 U.S. gal.	inches	16	17	20.5	13.75	7	7.75	19.12	9	16.25	10.88	39.5	2.38	4.88	31.75	0	15.75
	46 litres	*mm*	*406*	*432*	*521*	*349*	*178*	*197*	*486*	*229*	*413*	*276*	*1003*	*60*	*124*	*806*	*0*	*400*
KDCT-20	20 U.S. gal.	inches	21	18	26.5	23.5	1.5	6.25	24.12	15.25	15.75	10.5	40.5	7.5	11.12	38.25	1.5	26
	76 litres	*mm*	*533*	*457*	*673*	*597*	*38*	*159*	*613*	*387*	*400*	*267*	*1029*	*191*	*283*	*972*	*38*	*660*

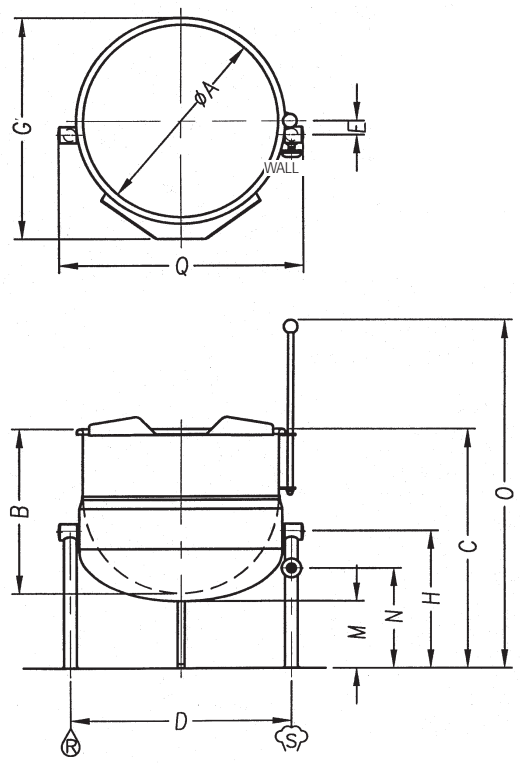

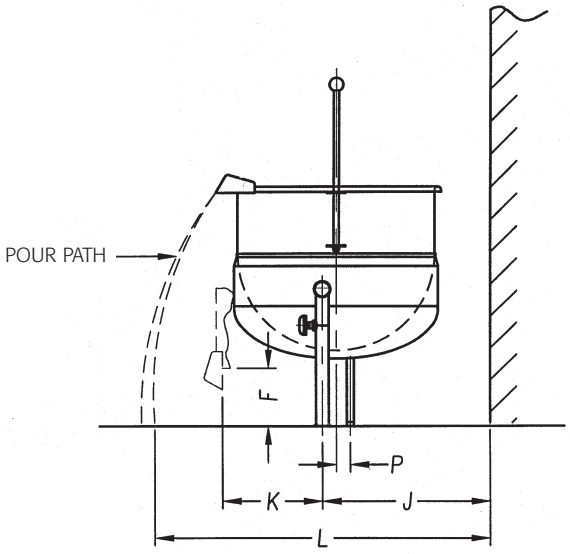

IN (mm)

04/03

2767R4

INTENDED FOR COMMERCIAL USE ONLY.
NOT FOR HOUSEHOLD USE.

SOUTHBEND

1100 Old Honeycutt Rd., Fuquay-Varina, NC 27526
www.southbendnc.com