Engineered to Perform, Built to Last.
SOUTHBEND

GAS STEAM KETTLE STATIONARY

Job _____ Item# _____

MODEL	CAPACITY	
KSLG-80	80 Gallon	303 Liter
KSLG-100	100 Gallon	379 Liter

OPERATION SHALL BE BY:

Natural or L.P. gas, A.S.M.E. code stamped for operation up to 35 psi. The steam kettle temperature ranges shall be between 165ºF to 265ºF. Burners shall be serviceable, high efficiency stainless steel with no shutter adjustment.

OPTIONAL ITEMS AT EXTRA COST:

- ❑ Stainless steel tri basket, TBA-1
- ❑ Electronic ignition
- ❑ Single pantry faucet with swing spout, SF-12
- ❑ Double pantry faucet with swing spout, DF-12
- ❑ Strainer hook
- ❑ 316 Stainless steel liner for high acid content products
- ❑ Graduated measuring strip or etched gallon markings
- ❑ 3" draw-off valve, TVS-3
- ❑ Tangent draw-off strainer, TPS or TSS
- ❑ Casters
- ❑ Dairy valve
- ❑ Prison package
- ❑ 208-240 VAC volt

SPECIFICATIONS:

Shall be a Model _____, gas fired, self-contained steam jacketed kettle, AGA and CGA design certified, NSF approved. The unit comes standard with a hinged stainless steel cover. The 60 gallon kettle comes standard with a spring assisted cover. The kettle shall be constructed with an exterior of type 304 stainless steel, #4 sanitary finish and 6” stainless steel adjustable legs. The interior kettle liner shall be a one piece welded construction made with type 304 stainless with #4 sanitary finish, 2/3 jacketed and shall be furnished with a 2” tangent draw off valve as standard. The recessed control panel is located on the front side of the unit in full view of the operator and is easy to use. Standard controls include a direct immersion thermostat, water sight glass, cooking light, pressure gauge and low water indicator light. Safety features shall include a low water cut off, pressure relief valve, pressure switch and a 100% safety gas shutoff valve.

Models: ☐ **KSLG-80** ☐ **KSLG-100**

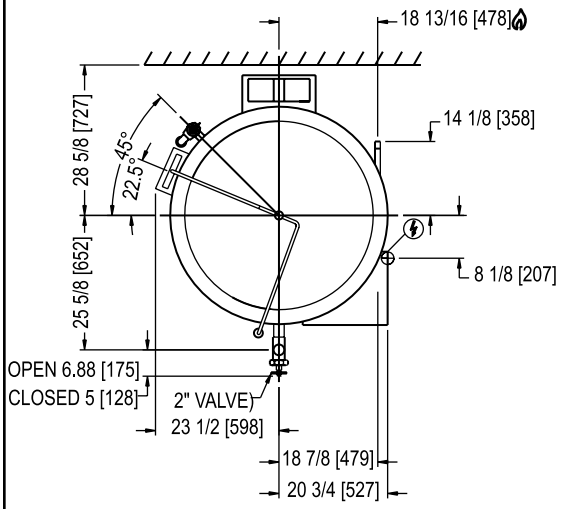

DIMENSIONS ARE IN INCHES [MM]

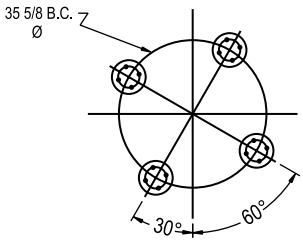

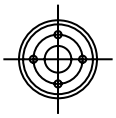

FLANGED FOOT DETAIL
4 EQUALLY SPACED
Ø7/16" [11mm] HOLES
ON 3 [76] B.C.

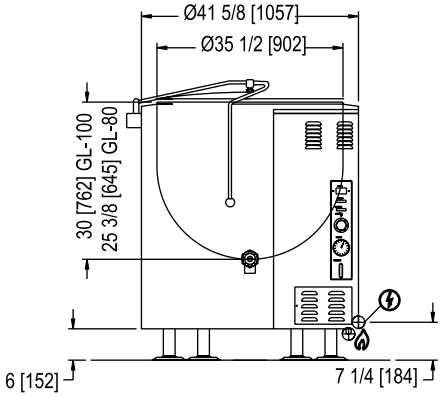

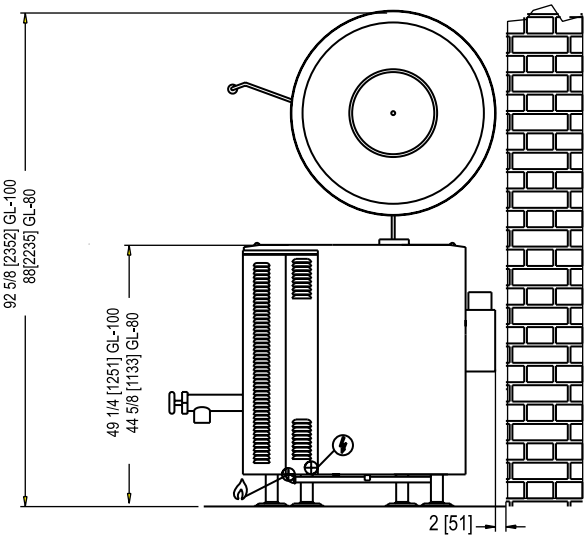

SERVICE CONNECTIONS

- GAS CONNECTION: One 1" male connection (for location, see drawing) ❑ Natural ❑ Propane

– ELECTRICAL CONNECTION - STANDARD: 115/60/1 - furnished with 6 ft cord w/3-prong plug. Total maximum amps 2.0

– ELECTRICAL CONNECTION - OPTIONAL: 208/60/1 or for use on 3 (190 to 219 volts) - supply must be wired to unit - see drawing. Total maximum amps 1.0

INTENDED FOR COMMERCIAL USE ONLY.
NOT FOR HOUSEHOLD USE.

Engineered to Perform, Built to Last.
SOUTHBEND
1100 Old Honeycutt Road, Fuquay-Varina, NC 27526
(919) 762-1000 www.southbendnc.com