Engineered to Perform, Built to Last.
SOUTHBEND

ELECTRIC STEAM TRI-LEG KETTLE

Job _____ Item# _____

MODEL	CAPACITY	
KELS-20	20 Gallon	76 Liter
KELS-30	30 Gallon	114 Liter
KELS-40	40 Gallon	152 Liter
KELS-60	60 Gallon	227 Liter
KELS-80	80 Gallon	303 Liter
KELS-100	100 Gallon	379 Liter

OPERATION SHALL BE BY:

Electrically, self-generating closed steam system equipped for operation on:

- ❑ 208 VAC, 3 Phase, 50/60 Hz
- ❑ 208 VAC, 1 Phase, 50/60 Hz*
- ❑ 240 VAC, 3 Phase, 50/60 Hz
- ❑ 240 VAC, 1 Phase, 50/60 Hz*

OPTIONAL ITEMS AT EXTRA COST:

- ❑ Type 316 stainless steel liner for high acid content products
- ❑ 3" *(76mm)* draw off valve
- ❑ 2" *(50mm)* dairy valve
- ❑ 3" *(76mm)* dairy valve
- ❑ 24 kw on 40, 60, 80 gallon
- ❑ 33 kw on 60, 80, 100 gallon
- ❑ 220 VAC, 1 Phase, 50/60 Hz*
- ❑ 220 VAC, 3 Phase, 50/60 Hz
- ❑ 380 VAC, 3 Phase, 50/60 Hz
- ❑ 415 VAC, 3 Phase, 50/60 Hz
- ❑ 480 VAC, 3 Phase, 50/60 Hz
- ❑ 220/380 VAC, 3 Phase, 4 wire
- ❑ 240/415 VAC, 3 Phase, 4 wire
- ❑ Two piece hinged stainless steel cover
- ❑ Etched gallon markings
- ❑ Etched litre markings
- ❑ Double pantry faucet with swing spout
- ❑ Single pantry faucet with swing spout
- ❑ Spring assist hinged cover
- ❑ Correctional package

  *20 and 30 gallon only

ACCESSORIES:

- ❑ Triple basket assembly
- ❑ Perforated strainer for draw off valve
- ❑ Solid stainless steel disc for draw off valve
- ❑ Graduated measuring strip
- ❑ Strainer hook
- ❑ Calibrated thermostat dial “C”
- ❑ Calibrated thermostat dial “F”

SPECIFICATIONS:

Shall be a Model_____, self-generating, electric, tri-leg kettle. A double wall kettle interior shall form a steam jacket around the lower 2/3 of the kettle. The jacket enclosure shall contain distilled water which is factory sealed. The bottom of the kettle shall be of hemispherical design for superior heat circulation. Kettle will be mounted on 3 stainless steel tubular legs fitted with a 4-hole adjustable foot for securing unit to the floor.

Construction shall be all welded #4 finish stainless steel type 304.

The controls shall include a power switch, thermostat, pilot light, low water light, vacuum/pressure gauge, safety valve, and low water shut off.

All kettles shall be standard with removable elements.

The kettle shall operate in a temperature range of 100°F to 290°F *(38°C to 144°C)* at a maximum pressure of 50 psi *(345kPa).*

Convenience features shall include a counterbalanced hinged stainless steel cover and a 2" *(50mm)* sanitary draw off valve.

Models: ☐ **KELS-20** ☐ **KELS-30** ☐ **KELS-40** ☐ **KELS-60** ☐ **KELS-80** ☐ **KELS-100**

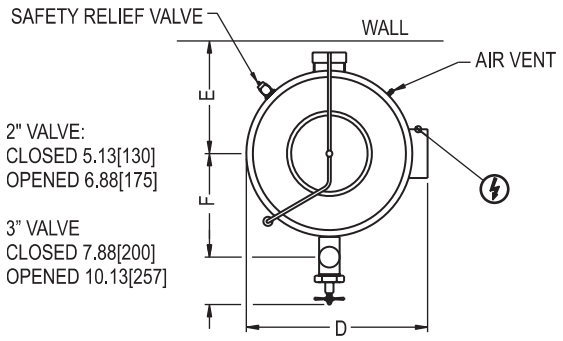

DIMENSIONS ARE IN INCHES [MM]

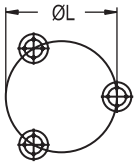

FLANGED FOOT DETAIL
4 EQUALLY SPACED
Ø7/16" [11mm] HOLES
ON 3 [76] B.C.

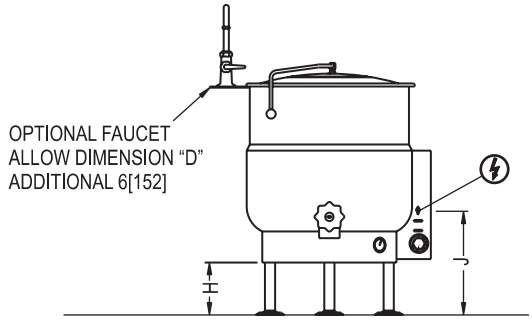

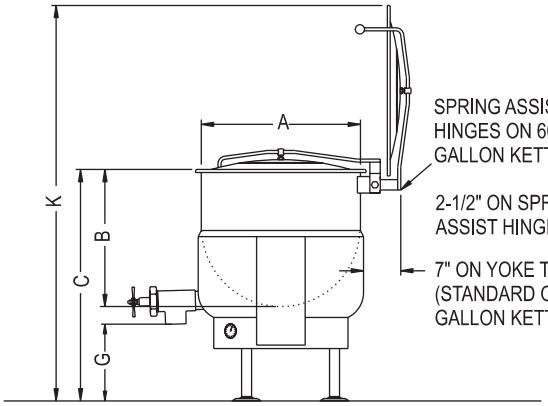

DIMENSIONS

Model	Capacity	Units	A	B	C	D	E	F(2")	F(3")	G(2")	G(3")	H	J	K	L
KELS-20	20 gallons (76 liters)	in (mm)	21" (533)	18" (457)	38" (965)	23.75" (629)	18.5" (470)	15.5" (394)	15.5" (394)	18" (457)	17.5" (445)	14" (356)	21" (533)	60.5" (1537)	16.75" (425)
KELS-30	30 gallons (114 liters)	in (mm)	24" (610)	20" (508)	38" (965)	27.75" (705)	20" (508)	16.5" (419)	16.5" (419)	15.75" (400)	15.25" (387)	12.5" (318)	19" (483)	63.5" (1613)	18.312" (465)
KELS-40	40 gallons (152 liters)	in (mm)	26" (660)	22.5" (572)	38" (965)	29.75" (756)	21" (533)	18" (457)	18" (457)	13.5" (343)	13" (330)	9" (229)	17" (432)	65" (1651)	19.938" (506)
KELS-60	60 gallons (227 liters)	in (mm)	29.5" (749)	26" (660)	42" (1067)	33.75" (857)	19" (483)	19.25" (489)	19.25" (489)	14" (356)	13.5" (343)	11" (280)	17.25" (438)	75" (1905)	23.125" (587)
KELS-80	80 gallons (303 liters)	in (mm)	33" (838)	28" (711)	45" (1143)	36.75" (933)	20.5" (521)	20.5" (521)	20.5" (521)	15" (381)	14.5" (368)	12.75" (324)	18" (458)	81" (2058)	26.25" (667)
KELS-100	100 gallons (379 liters)	in (mm)	35.5" (902)	30" (762)	48" (1219)	40" (1016)	22" (559)	22.5" (572)	22.5" (572)	15" (381)	14.5" (368)	13" (330)	20.5" (521)	87" (2210)	29.438" (748)

ELECTRICAL CHARACTERISTICS

Model	Phase	208V		230V		240V		380V		415V		480V	
		kW	Amps	kW	Amps	kW	Amps	kW	Amps	kW	Amps	kW	Amps
KELS-20	3	12	33.4	12	31.5	12	28.9	12	18.3	12	16.7	12	14.5
KELS-30	3	15	41.7	15	39.4	15	36.1	15	22.8	15	20.8	15	18.0
KELS-40 KELS-60 KELS-80	3	18	50.0	18	47.2	18	43.4	18	27.4	18	25	18	21.7
KELS-100	3	24	66.6	24	63.0	24	57.7	24	36.5	24	33.3	24	28.9

SERVICE CONNCETIONS

ϟ – ELECTRICAL CONNECTION : to be specified on dataplate

INTENDED FOR COMMERCIAL USE ONLY.
NOT FOR HOUSEHOLD USE.

Engineered to Perform, Built to Last.
SOUTHBEND
1100 Old Honeycutt Road, Fuquay-Varina, NC 27526
(919) 762-1000 www.southbendnc.com