Engineered to Perform, Built to Last.
SOUTHBEND

# ELECTRIC PEDISTAL KETTLE

Job _____ Item# _____

| MODEL | CAPACITY | |
|---|---|---|
| KEPS-20 | 20 Gallon | 76 Liter |
| KEPS-30 | 30 Gallon | 114 Liter |
| KEPS-40 | 40 Gallon | 152 Liter |
| KEPS-60 | 60 Gallon | 227 Liter |
| KEPS-80 | 80 Gallon | 303 Liter |
| KEPS-100 | 100 Gallon | 379 Liter |

SPECIFICATIONS:

Shall be a Model_____ , self-generating, electric, pedestal kettle. A double wall kettle interior shall form a steam jacket around the lower 2/3 of the kettle. The jacket enclosure shall contain water and anti-freeze which is factory sealed. The bottom of the kettle shall be of hemispherical design for superior heat circulation. Pedestal base shall have four 7/16 of an inch holes evenly spaced for securing unit to floor.

Construction shall be all welded satin finish stainless steel, type 304.

The controls shall include a power switch, thermostat, pilot light, low water light, vacuum/pressure gauge, safety valve and low water shut off.

All kettles shall be standard with removable elements.

The kettle shall operate in a temperature range of 100°F to 290°F *(38°C to 144°C)* at a maximum pressure of 50 psi *(3.4 kg/cm2).*

Convenience features shall include a counterbalanced hinged stainless steel cover and a 2" *(50 mm)* sanitary drawoff valve with heat resistant handle

**OPERATION SHALL BE BY:**

Electrically, self-generating closed steam system equipped for operation on:

- ❑ 208 VAC, 1 or 3 Phase, 50/60 Hz
- ❑ 230 VAC, 1 or 3 Phase, 50/60 Hz
- ❑ 240 VAC, 1 or 3 Phase, 50/60 Hz

**OPTIONAL ITEMS AT EXTRA COST:**

- ❑ Type 316 stainless steel liner for high acid content cooking products.
- ❑ Triple basket assembly
- ❑ 3" *(76 mm)* draw-off valve
- ❑ High wattage heaters for faster heating
- ❑ Double pantry faucet with swing spout
- ❑ Single pantry faucet with swing spout
- ❑ Strainer for draw-off valve
- ❑ Spring assist cover for 20-40 gallon
- ❑ 380, 415 or 480 VAC, 3 Phase, 50/60 Hz
- ❑ 220/380, 240/415 VAC, 3 Phase, 4 Wire
- ❑ Graduated measuring strip
- ❑ Strainer hook

**Models:** ☐ KEPS-20 ☐ KEPS-30 ☐ KEPS-40 ☐ KEPS-60 ☐ KEPS-80 ☐ KEPS-100

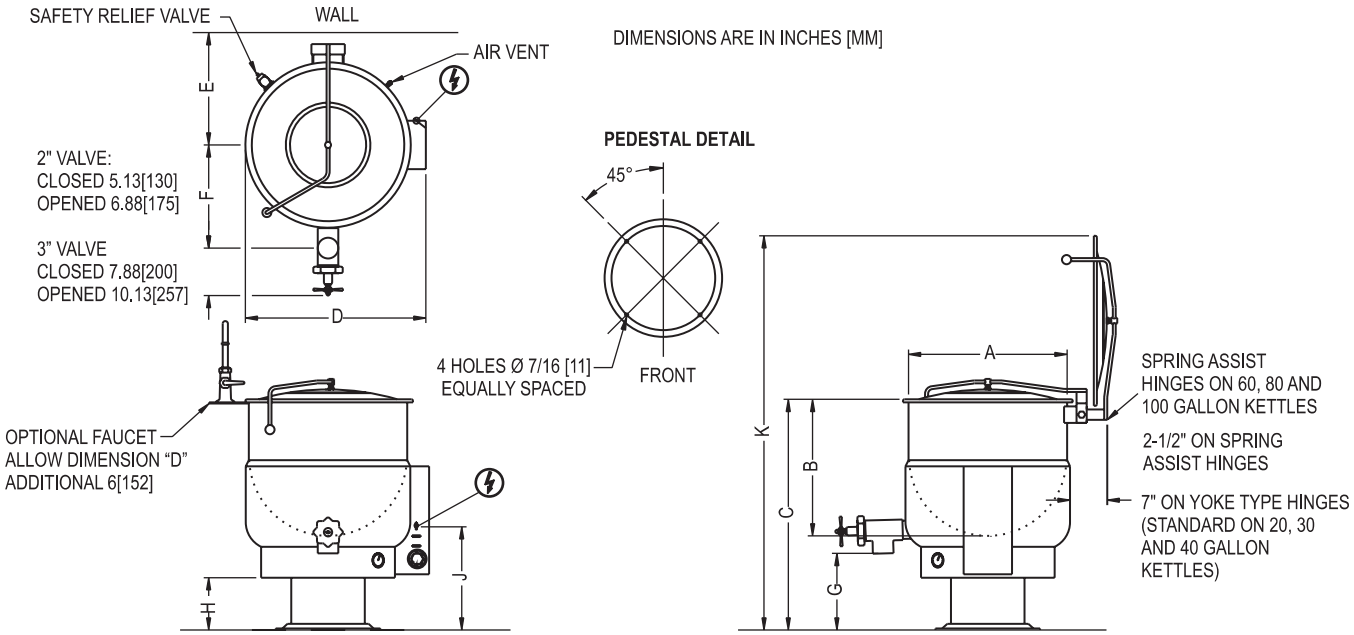


**DIMENSIONS**

| Model | Capacity | Units | A | B | C | D | E | F | G | H | J | K | L |
|---|---|---|---|---|---|---|---|---|---|---|---|---|---|
| KEPS-20 | 20 gallons (76 liters) | in (mm) | 18" (437) | 38" (965) | 60.5" (1537) | 21" (553) | 18.5" (470) | 13.75" (350) | 6" (152) | 23.75" (629) | 18" (457) | 14" (356) | 21" (533) |
| KEPS-30 | 30 gallons (114 liters) | in (mm) | 16" (406) | 38" (965) | 63.3" (1613) | 24" (610) | 20" (508) | 15" (381) | 6" (152) | 27.75" (705) | 20" (508) | 12.5" (318) | 19" (483) |
| KEPS-40 | 40 gallons (152 liters) | in (mm) | 13.5" (343) | 38" (965) | 65" (1651) | 26" (660) | 21" (533) | 16" (406) | 6" (152) | 29.75" (756) | 22.5" (572) | 9" (229) | 17" (432) |
| KEPS-60 | 60 gallons (227 liters) | in (mm) | 14" (356) | 42" (1067) | 75" (1905) | 29.5" (749) | 19" (483) | 17" (432) | 6" (152) | 33.75" (857) | 26" (660) | 11" (280) | 17.25" (438) |
| KEPS-80 | 80 gallons (303 liters) | in (mm) | 15" (381) | 45" (1143) | 81" (2058) | 33" (838) | 20.5" (521) | 18.5" (470) | 6" (152) | 36.75" (933) | 28" (711) | 12.75" (324) | 18" (458) |
| KEPS-100 | 100 gallons (379 liters) | in (mm) | 15" (381) | 48" (1219) | 87" (2210) | 35.5" (902) | 22" (559) | 20.5" (521) | 6" (152) | 40" (1016) | 30" (762) | 13" (330) | 20.5" (521) |

**ELECTRICALCHARACTERISTICS**

| Model | 208V | | 230V | | 240V | | 380V | | 415V | | 480V | |
|---|---|---|---|---|---|---|---|---|---|---|---|---|
| | kW | Amp | kW | Amp | kW | Amp | kW | Amp | kW | Amp | kW | Amp |
| KEPS-20 | 12 | 33.4 | 12 | 30.1 | 12 | 28.9 | 12 | 18.3 | 12 | 16.7 | 12 | 14.5 |
| KEPS-30 | 15 | 41.7 | 15 | 37.7 | 15 | 36.1 | 15 | 22.8 | 15 | 20.8 | 15 | 18.0 |
| KEPS-40 KEPS-60 KEPS-80 | 18 | 50.0 | 18 | 45.2 | 18 | 43.4 | 18 | 27.4 | 18 | 25.0 | 18 | 21.7 |
| KEPS-100 | 24 | 66.6 | 24 | 60.2 | 24 | 57.7 | 24 | 36.5 | 24 | 33.3 | 24 | 28.9 |

**SERVICE CONNECTIONS**

ϟ – ELECTRICAL CONNECTION : to be specified on dataplate

**INTENDED FOR COMMERCIAL USE ONLY.**
**NOT FOR HOUSEHOLD USE.**


Engineered to Perform, Built to Last.
SOUTHBEND
1100 Old Honeycutt Road, Fuquay-Varina, NC 27526
(919) 762-1000 www.southbendnc.com