Engineered to Perform, Built to Last.
SOUTHBEND

# DIRECT STEAM TRI-LEG KETTLE

Job _____ Item# _____

| MODEL | CAPACITY | |
|---|---|---|
| KDLS-20 | 20 Gallon | 76 Liter |
| KDLS-30 | 30 Gallon | 114 Liter |
| KDLS-40 | 40 Gallon | 152 Liter |
| KDLS-60 | 60 Gallon | 227 Liter |
| KDLS-80 | 80 Gallon | 303 Liter |
| KDLS-100 | 100 Gallon | 379 Liter |

**SPECIFICATIONS:**

Shall be a Model _____, direct steam connected tri-leg kettle. A double wall kettle interior shall form a steam jacket around the lower 2/3 of the kettle. The bottom of the kettle shall be of hemispherical design for superior heat circulation.

Unit shall be mounted on stainless steel tubular tri-legs. Each leg shall be fitted with a 4 hole adjustable flanged foot for securing to the floor.

Construction shall be all welded satin finish stainless steel, type 304. The liner on models 20 through 40 gallon shall be standard 316 for high acid content cooking.

Convenience features shall include 2" *(50mm)* sanitary draw-off valve, 20 through 40 gallon models are supplied with a hinged counterbalanced stainless steel domed cover. The 60 through 100 gallon models are supplied with a spring assist hinged stainless steel domed cover.

**OPERATION SHALL BE BY:**

Direct steam at a minimum of 5 PSI *(34kPa)* and a maximum
of 35 PSI *(241kPa).*

**OPTIONAL ITEMS AT EXTRA COST:**

- ❑ Type 316 stainless steel liner for high acid content cooking on models 60 through 100 gallon
- ❑ 50 PSI *(345kPa)* high pressure operation for higher cooking temperature for 20 to 60 gallon
- ❑ 3" *(76 mm)* draw off valve
- ❑ 2" *(50 mm)* dairy valve
- ❑ 3" *(76 mm)* dairy valve
- ❑ Spring assist cover on 20 to 40 gallon kettles
- ❑ Etched gallon markings
- ❑ Etched litre markings
- ❑ Single pantry faucet with swing spout
- ❑ Double pantry faucet with swing spout
- ❑ Two piece hinged cover

**ACCESSORIES:**

- ❑ Triple basket assembly
- ❑ Steam trap assembly (consisting of steam trap, steam control valve, check valve and line strainer
- ❑ Perforated strainer for draw off valve
- ❑ Solid disc for draw off valve
- ❑ Strainer hook
- ❑ Graduated measuring strip

**Models:** ☐ **KDLS-20** ☐ **KDLS-30** ☐ **KDLS-40** ☐ **KDLS-60** ☐ **KDLS-80** ☐ **KDLS-100**

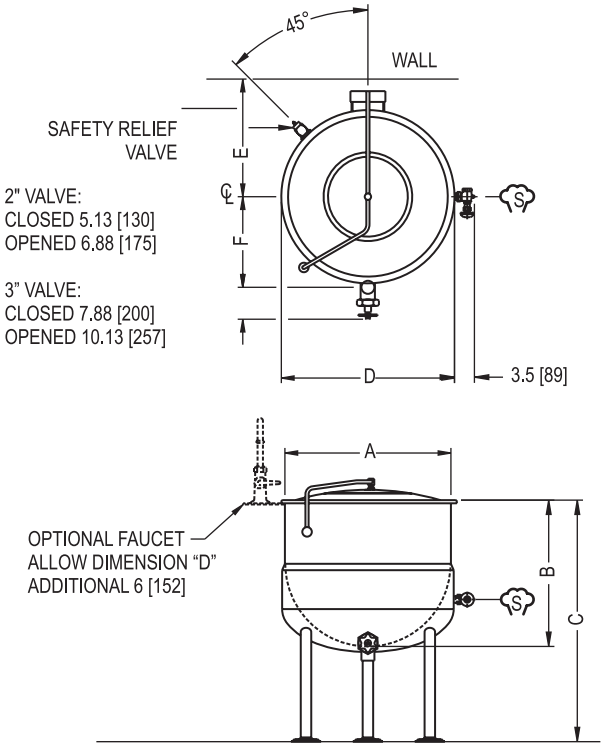


DIMENSIONS ARE IN INCHES [MM].

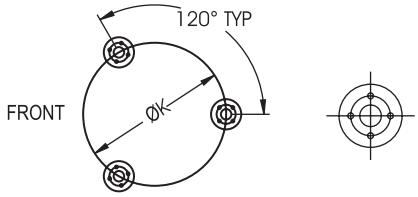




**FLANGED FOOT DETAIL**
4 EQUALLY SPACED
Ø7/16" [11mm] HOLES
ON 3 [76] B.C.

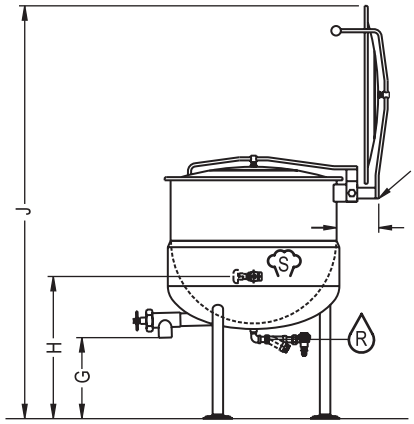


**DIMENSIONS**

| Model | Capacity | Units | A | B | C | D | E | F(2") | F(3") | G(2") | G(3") | H | J | K | L |
|---|---|---|---|---|---|---|---|---|---|---|---|---|---|---|---|
| KDLS-20 | 20 gallons (76 liters) | in (mm) | 21" (533) | 18" (457) | 37" (940) | 22.75" (578) | 16" (406) | 12.75" (324) | 14" (356) | 17" (432) | 16.5" (419) | 25.88" (657) | 21" (533) | 59.75" (1518) | 17.5" (445) |
| KDLS-30 | 30 gallons (114 liters) | in (mm) | 24" (610) | 20" (508) | 37" (940) | 25.88" (657) | 17.5" (445) | 13.5" (343) | 15.25" (387) | 15" (381) | 14.5" (368) | 26.88" (670) | 19" (483) | 62.88" (1597) | 20.5" (521) |
| KDLS-40 | 40 gallons (152 liters) | in (mm) | 26" (660) | 22.5" (572) | 37" (940) | 27.88" (708) | 18.5" (470) | 14.25" (362) | 16.5" (419) | 12.5" (318) | 12" (305) | 23.88" (606) | 17" (432) | 64.88" (1648) | 22.5" (572) |
| KDLS-60 | 60 gallons (227 liters) | in (mm) | 29.5" (749) | 26" (660) | 40.5" (1029) | 31.38" (822) | 17.75" (451) | 15.5" (394) | 17.25" (438) | 12.5" (318) | 12" (305) | 24.69" (627) | 17.25" (438) | 72.88" (1851) | 25.75" (654) |
| KDLS-80 | 80 gallons (303 liters) | in (mm) | 33" (838) | 28" (711) | 40.5" (1029) | 34.75" (883) | 19.5" (495) | 17.5" (445) | 19.25" (489) | 10.5" (267) | 10" (254) | 23.88" (606) | 18" (458) | 75.25" (1911) | 29.25" (743) |
| KDLS-100 | 100 gallons (379 liters) | in (mm) | 35.5" (902) | 30" (762) | 44.5" (1130) | 37.25" (946) | 20.75" (527) | 17" (432) | 19.25" (489) | 12.5" (318) | 12" (305) | 26.63" (676) | 20.5" (521) | 81.75" (2076) | 31.75" (806) |

**SERVICE CONNECTIONS**

(S) – STEAM SUPPLY: 3/4" IPS (19 mm)

(R) - CONDENSATE RETURN: 1/2" IPS (13 mm)

**INTENDED FOR COMMERCIAL USE ONLY.**
**NOT FOR HOUSEHOLD USE.**


Engineered to Perform, Built to Last.
SOUTHBEND
1100 Old Honeycutt Road, Fuquay-Varina, NC 27526
(919) 762-1000 www.southbendnc.com