Engineered to Perform, Built to Last.
SOUTHBEND

ELECTRIC TILTING SKILLET

Job _____ Item# _____

MODEL	CAPACITY	
BECT-24	24 Gallon	91 Liter
BECT-30	30 Gallon	114 Liter
BECT-40	40 Gallon	152 Liter

OPERATION SHALL BE BY:

Electric heating elements equipped for operation on:

- ❑ 208 VAC, 3 phase, 50/60 Hz
- ❑ 240 VAC, 3 phase, 50/60 Hz

OPTIONAL ITEMS AT EXTRA COST:

- ❑ 380 VAC, 3 phase, 50/60 Hz
- ❑ 415 VAC, 3 phase, 50/60 Hz
- ❑ 480 VAC, 3 phase, 50/60 Hz
- ❑ 220/380 VAC, 1 phase, 50/60 Hz
- ❑ 240/415 VAC, 1 phase, 50/60 Hz
- ❑ Vented stainless steel pan cover
- ❑ 2" *(50 mm)* draw-off valve
- ❑ 60 minute mechanical timer mounted on left console

ACCESSORIES:

- ❑ Single pantry faucet with swing spout
- ❑ Double pantry faucet with swing spout
- ❑ Steam pan inset
- ❑ Pan support

SPECIFICATIONS:

Shall be a Model _____, electrically heated tilting skillet, UL listed, CSA certified and NSF approved. The skillet shall be of one piece coved corner, 10 gauge stainless steel with a #4 exterior finish and a polished interior. The pan sides shall slope outward to facilitate access to the cooking surface. Heating shall be accomplished by electric elements cast embedded in a full 1-1/2" *(38 mm)* thick aluminum casting bolted to the underside of the pan for even heat distribution across the entire surface. Pan shall pivot on side trunnions connected to the gear and control consoles. The consoles shall be drip proof, stainless steel clad and shall be supported by an all welded 1-5/8" *(41 mm)* stainless steel pipe frame with front legs fitted with adjustable bullet feet and rear legs fitted with flange adjustable feet for securing to the floor. The worm and gear tilt mechanism shall allow the pan to tilt forward manually for complete emptying of contents. The controls shall be integrally mounted in the right hand console and shall include a thermostat, power switch, pilot light and contactors. As a safety feature the pan shall be equipped with high limit thermostat to shut down operation should thermostat fail.

Convenience features shall include a spring assist hinged stainless steel cover with handle and no drip condensate guide, and a removable pour strainer on the pour lip.

The skilled shall operate in a temperature range of 160°F to 450°F *(71°C to 232°C).*

Models: ☐ **BECT-24** ☐ **BECT-30** ☐ **BECT-40**

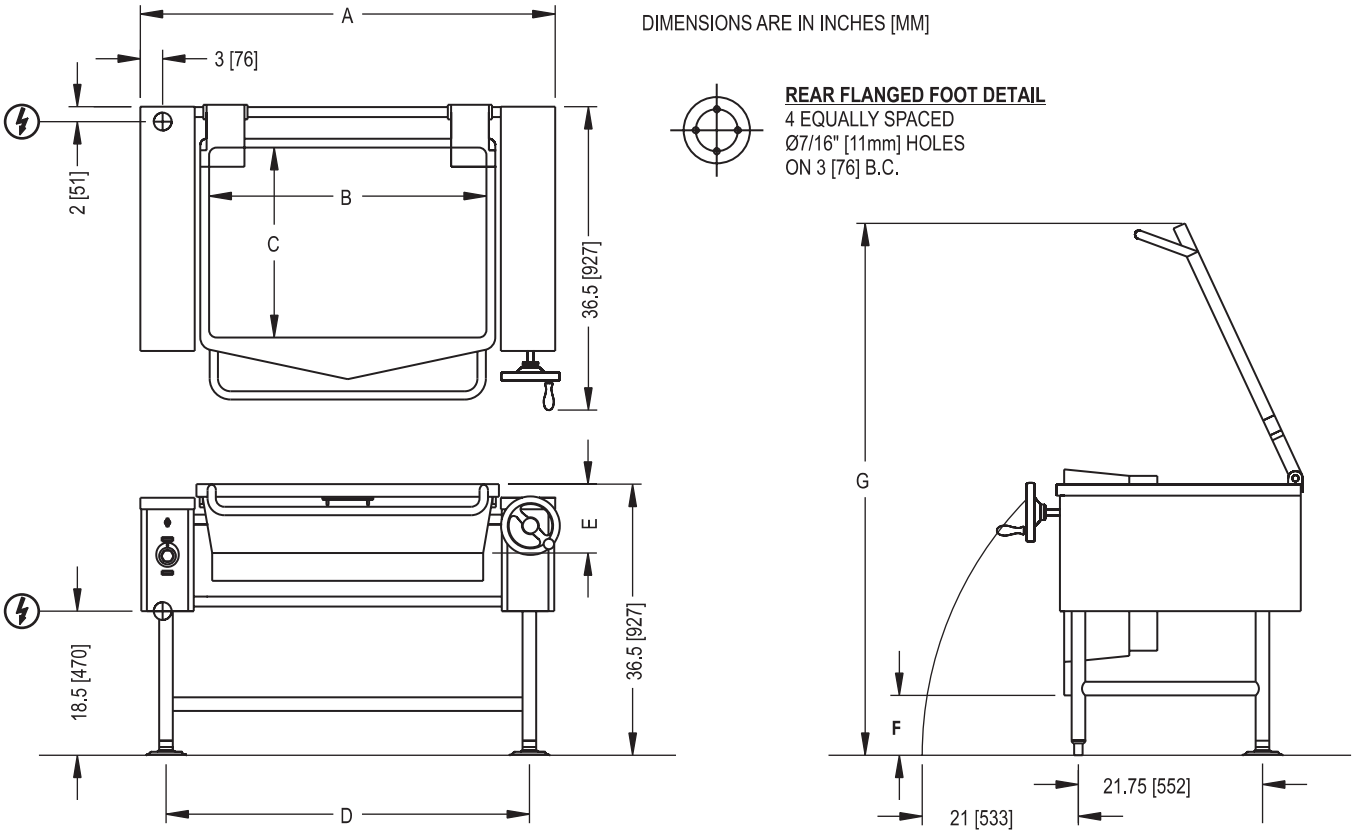

DIMENSIONS

Model	Capacity	Units	A	B	C	D	E	F	G
BECT-24	24 Gallons (91 liters)	inches (mm)	50.5" (1283)	33.75" (857)	23.125" (587)	43.625" (1108)	7" (178)	11" (279)	66" (1676)
BECT-30	30 Gallons (114 liters)	inches (mm)	50.5" (1283)	33.75" (857)	23.125" (587)	43.625" (1108)	8.75" (222)	11" (279)	66" (1676)
BECT-40	40 Gallons (152 liters)	inches (mm)	66.5" (1689)	49.5" (1257)	24" (610)	59.5" (1511)	8.75" (222)	11" (279)	67" (1702)

ELECTRICAL CHARACTERISTICS

Model	Ph	208V		220V		240V		380V		415V		480V	
		kW	Amp	kW	Amp	kW	Amp	kW	Amp	kW	Amp	kW	Amp
BECT-24 BECT-30	3	18	50.0	18	45.2	18	43.3	18	27.3	18	25.0	18	21.6
BECT-40	3	27	75.0	27	67.8	27	65.0	27	41.0	27	37.6	27	32.5

SERVICE CONNCETIONS

ϟ – ELECTRICAL CONNECTION: As specified by dataplate

INTENDED FOR COMMERCIAL USE ONLY.
NOT FOR HOUSEHOLD USE.

Engineered to Perform, Built to Last.
SOUTHBEND
1100 Old Honeycutt Road, Fuquay-Varina, NC 27526
(919) 762-1000 www.southbendnc.com