Engineered to Perform, Built to Last.
SOUTHBEND

Direct Steam Table Mount Steam Jacketed "Oyster Cooker"

Job _____ Item# _____

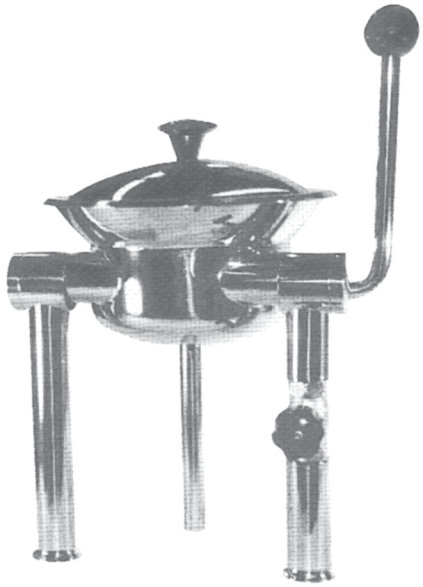

Model		Capacity
TOC-1	Oyster Cooker	1 Qt.
TOC-2	Oyster Cooker	2 Qt.

SPECIFICATIONS:

Shall be a Model _____, stainless steel type 304 satin finished. Cooker operating at a max. 15 psi *(103kPa).*

Oyster Cooker will tilt on kettle trunnions having lifetime "O" ring seals. Ease of tilting is provided with a right tilt handle and a pouring lip is provided to direct fluid flow.

Oyster Cooker is supported on kettle trunnions by left and right legs and a centre rigid leg provides level support. The right leg shall have a steam control valve to regulate steam entry into the jacket. The left leg provides a means for removing condensate formed in the jacket.

REQUIREMENT:

Remote steam source - max. 15 psi *(103kPa).*

Steam trap for each oyster cooker.

One safety relief valve for one or more units connected to the same steam supply line. (See reverse).

Steam shut off valve in steam line convenient and adjacent to unit.

If steam source is a considerable distance away from oyster cooker, condensate will likely form in the steam line and will require a ball float trap for removal of condensate.

Models: ☐ **TOC-1** ☐ **TOC-2**

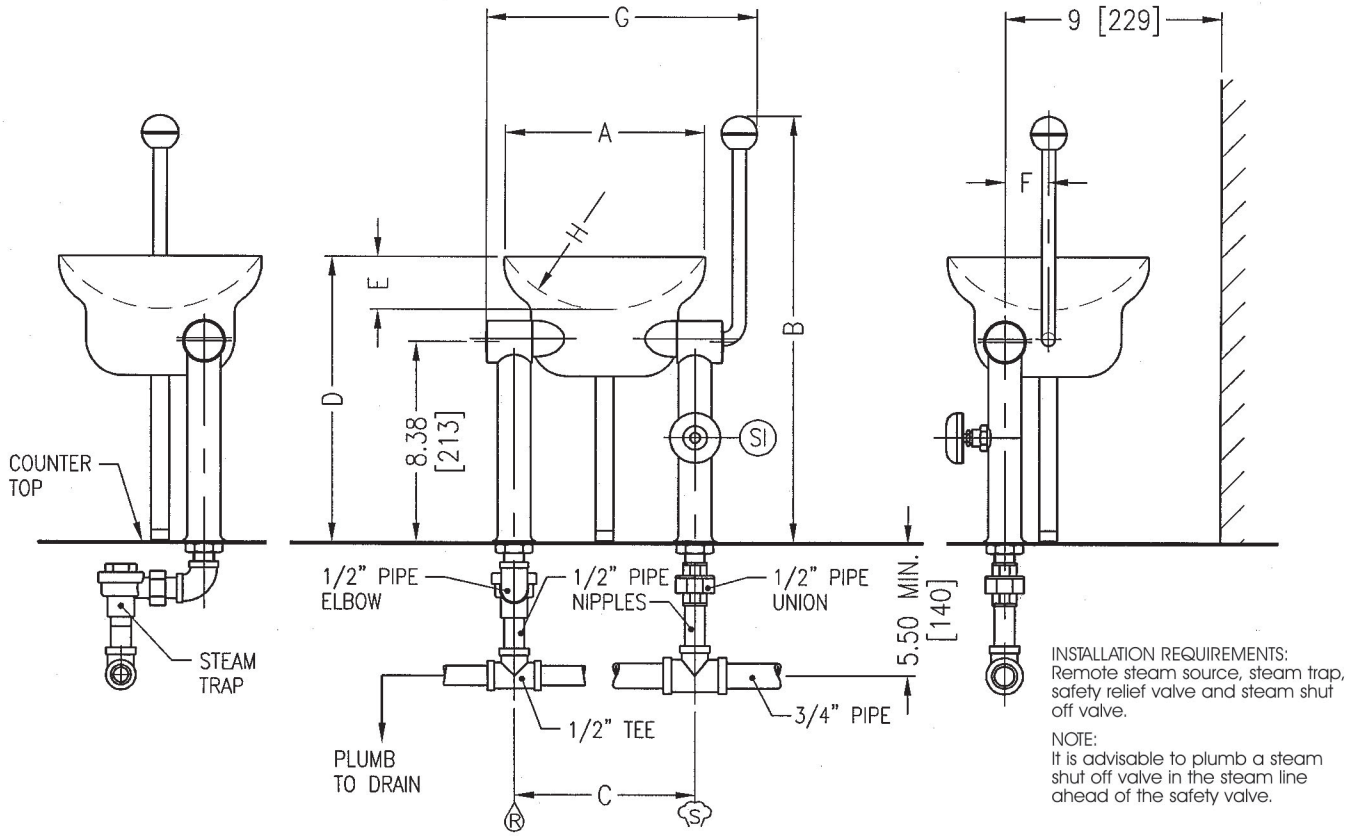

DIMENSIONS

Model	Capacity	Units	A	B	C	D	E	F	G
TOC-1	1 Quart (0.95 liters)	inches (mm)	8.25" (210)	17.88" (454)	7.5" (191)	12" (305)	2.25" (57)	1.88" (48)	11.25" (286)
TOC-2	2-Quart (1.9 liters)	inches (mm)	10" (254)	17.88 (454)	8.5" (216)	12.12" (308)	2.63" (67)	2.375" (60)	12.38" (314)

SERVICE CONNECTIONS

(S) –STEAM SUPPLY: 1/2" IPS for incoming steam at a minimum of 5 PSI (34 kPa) and a maximum of 15 PSI (103 kPa).

(R) –CONDENSATE RETURN: 1/2" IPS condensate return from cooker may be connected to condensate return line.

SI –STEAM CONTROL VALVE: REgulates flow of steam into cooker jacket.

INTENDED FOR COMMERCIAL USE ONLY.
NOT FOR HOUSEHOLD USE.

Engineered to Perform, Built to Last.
SOUTHBEND
1100 Old Honeycutt Road, Fuquay-Varina, NC 27526
(919) 762-1000 www.southbendnc.com