300 Series
Restaurant Range
36” Wide Griddle, Single Oven

Standard Oven
336D-3G

Job _____ Item# _____

Standard Features

- Smooth polished griddle - 1/2” steel plate with raised sides 36-1/2” x 24-3/4”
- Four 16,000 BTU (NAT or LP) Burners
- Rigid single deck back shelf
- Stainless steel front and shelf
- Galvanized Sides
- Heat resistant door handle
- Commercial gas range 36-1/2” wide with a 37” cooking top (including 6” high adjustable legs)
- One year Parts and Labor Warranty

Standard Oven (D suffix)

- 32,000 BTU NAT (30,000 BTU LP)
- Large 26” wide x 26-1/2” deep oven -full sheet pans fit both ways
- Single rack per oven
- Equipped with a flame safety device
- Thermostat range from 250°-500°F (121°-260°C) with low setting

(shown with optional casters)

STANDARD CONSTRUCTION SPECIFICATIONS

Exterior Finish: Stainless steel front and shelf standard. Galvanized sides.

Griddle: Equipped with smooth Polished griddle -1/2’ thick steel plate with high raised sides. 36-1/2” wide x 24-3/4” deep. Four 16,000 BTU (NAT or LP) Burners.

Option: Thermostat griddle control with 2 throttling type thermostats.

Back Shelf: Rigid, single deck stainless steel.

Door: Constructed with heavy duty hinges and unbreakable quadrants and heat resistant handle.

Legs: 6” black, adjustable

Standard Oven: 32,000 BTU NAT (30,000 BTU LP)with thermostat range of 150°F to 500°F. Cavity sides, top and back -aluminized steel. Oven bottom and door lining porcelain enamel finish. Porcelain enamel interior, measuring 14” high x 26” wide x 26-1/2” deep. Two position rack guides with one removable rack. Oven thermostat temperature type adjustable for 250°F to 500°F. Factory installed pressure regulator.

Models: ☐ **336D-3G**

Dimensions -in (mm)

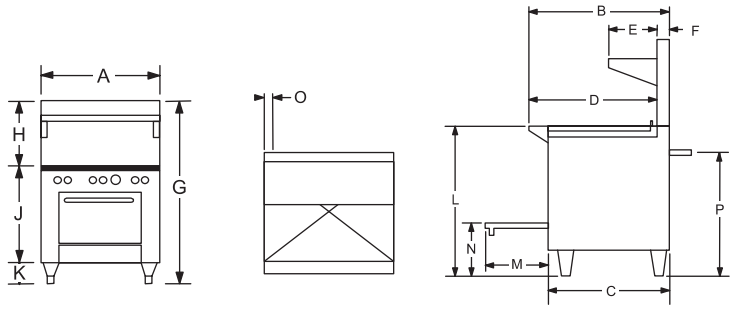

Models	Exterior										Cook Top	Door Opening	Oven Bottom	3/4" Gas Conn.	
	Width A	Depth B	C	D	E	F	G	H	J	K	L	M	N	O	P
336D-3G	36.50" (927)	34.00" (864)	29.75" (756)	31.00" (787)	12.00" (305)	2.75" (70)	59.50" (1511)	22.50" (572)	31.00" (787)	6.00" (152)	37.00" (940)	15.50" (394)	13.00" (330)	3.25" (83)	30.25" (768)

Models	Burners (BTU Each NAT/LP)			Oven Interior			Crate Size			Cubic Volume	Crated Weight
	Griddle	Open	Oven	Width	Depth	Height	Width	Depth	Height		
336D-3G	4@(16K/16K)	-	1@(32K/30K)	26.00" (660)	26.50" (673)	14.00" (356)	44.00" (1118)	45.50" (1158)	48.00" (1219)	55.6 cu. ft 1.57 cu.m.	645 lbs. 292.6 kg.

UTILITY INFORMATION

Gas:

- Total BTU: NAT: 96,000 BTU; LP: 94,000 BTU
- Required operating pressure:
  Natural Gas 4" W.C.
  Propane Gas 10" W.C.

- Pressure regulator is supplied with unit.
- Required supply line size to the regulator is 3/4" NPT.
- If using Flex-Hose, the I.D. should not be smaller than the I.D. of the manifold of the unit to which it is being connected
- Check local codes for fire and sanitary regulations.
- If the unit is connected directly to the outside flue, and A.G.A approved down draft diverter must be installed at the flue outlet of the oven

MISCELLANEOUS

- If using Flex-Hose, the I.D. should not be smaller than 3/4" and must comply with ANSI Z 21.69
- If casters are used with flex hose, a restraining device should be used to eliminate undue strain on the flex hose
- For installation on combustible floors (with 6" high legs) and adjacent to combustible walls, allow 6" clearance.
- Install under vented hood
- Check local codes for fire, installation and sanitary regulations.

NOTICE:

Southbend has a policy of continuous product research and improvement. We reserve the right to change specifications and product design without notice. Such revisions do not entitle the buyer to corresponding changes, improvements, additions or replacements for previously purchased equipment.

OPTIONS AND ACCESSORIES

☐ Casters-all swivel-front with locks

☐ Extra Oven Racks

INTENDED FOR COMMERCIAL USE ONLY.
NOT FOR HOUSEHOLD USE.

1100 Old Honeycutt Road, Fuquay-Varina, NC 27526
(919) 762-1000 www.southbendnc.com