WARING COMMERCIAL

Hi-Power Blender Series

MX1300XT/MX1300XTP/MX1300XTS

Features

- Heavy-duty 3.5 peak input HP motor
- 45,000 RPM (bare motor speed)
- Great for smoothies, bar drinks, soups, etc.
- Easy-to-clean electronic membrane keypad with blue backlit LCD screen
- Four reprogrammable beverage stations
- Adjustable speed controls
- Dual pulse functions
- Sound enclosure available for quiet operation (SE500/SE1000)

MX1300XTP

MX1300XTS

MX1300XT

WARING COMMERCIAL

Xtreme Hi-Power Blender Series
MX1300XT/MX1300XTP/MX1300XTS

Specifications

Item	Electrical	Listings	RPM (bare motor)	Dimensions (H" x W" x D")	Warranty
MX1300XT/ MX1300XTS	120 Volt, 13 Amp, 50/60 Hz	ETL,NSF	45,000	18"x8½"x8¼"	Limited 3 Year Motor and 2 Year Parts and Labor
MX1300XTP	120 Volt, 13 Amp, 50/60 Hz	ETL,NSF	45,000	16"x8½"x8¼"	Limited 3 Year Motor and 2 Year Parts and Labor

Ordering Information

Description	Catalog #	Std Pkg.	Ship Wt. (Lbs.)	Cubic Feet	UPC Code
Xtreme Hi-Power Blender with 64 oz. Polycarbonate Container	MX1300XT	1	15 lbs.	0.92	040072006838
Xtreme Hi-Power Blender with 48 oz. Polycarbonate Container	MX1300XTP	1	15 lbs.	0.92	040072006845
Xtreme Hi-Power Blender with 64 oz. Stainless Steel Container	MX1300XTS	1	16 lbs.	0.92	040072006852
48 oz. Polycarbonate Container	CAC93	1	3.5 lbs.	0.33	040072004575
64 oz. Polycarbonate Container	CAC89	1	3.5 lbs.	0.34	040072002342
64 oz. Stainless Steel Container	CAC90	1	6 lbs.	0.34	040072002359
Sound Enclosure for Xtreme Series 64 oz. Containers	SE1000	1	5.5 lbs.	1.05	040072002366
Sound Enclosure for Xtreme Series 48 oz. Containers	SE500	1	5 lbs.	0.95	040072007668

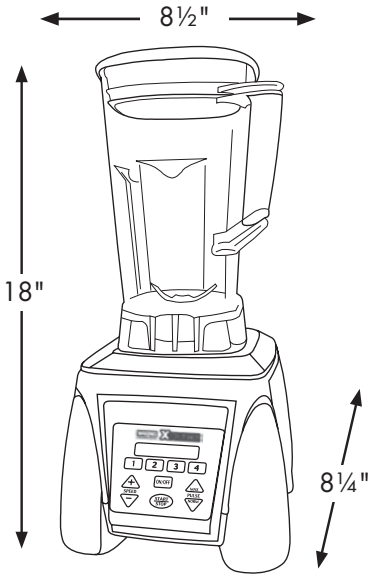

MX1300XT/MX1300XTS

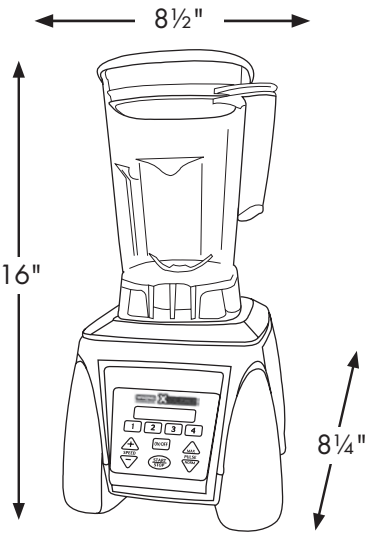

MX1300XTP

Waring Commercial • 314 Ella T. Grasso Ave. • Torrington • Connecticut 06790
Tel. (800) 492-7464 • Fax (860) 496-9008 • www.waringproducts.com • ©2006 Waring

06WC30175
PG-19939