ITEM#

SERV-RITE™ PORTABLE BUFFET WARMERS

Models SRB-1, SRBW-1
SRG-1, SRGBW-1

The Hatco Serv-Rite™ Portable Buffet Warmers are designed to keep prepared foods at optimum serving temperatures without affecting quality. They are perfect for self-serve buffet areas and customer serving points. All Serv-Rite Buffet Warmers feature a thermostatically-controlled heated base, durable stainless steel construction, sturdy aluminum extrusions, and a 6' (1829 mm) cord with plug.

FLEXIBILITY

Ideal for use in buffet lines and as hors d'ouevre displays for self-serve areas. These unique elliptical foodwarmers are available with or without overhead halogen heat lamps and glass sneeze guards.

QUALITY

The following features assure the finest performance for years to come:

- Safely holds hot food at proper serving temperatures.
- Digital temperature control for accurate food holding.
- SRBW and SRGBW models have top light and halogen heat that is variably controlled from a base mounted dimmer switch.
- All equipped with removable utensil tray for easy cleaning.
- All units come with a 6' (1829 mm) cord and plug.

SRB-1

Accessory Carving Station Pan (SRBW-1 model only)

SRBW-1

SRG-1

SRGBW-1

BLANKET ELEMENTS GUARANTEED AGAINST BURNOUT AND BREAKAGE FOR ONE YEAR.

HATCO CORPORATION P.O. Box 340500 Milwaukee, WI 53234-0500 U.S.A.
(800) 558-0607 • (414) 671-6350 • Fax (800) 543-7521 • Int'l. Fax (414) 671-3976
www.hatcocorp.com • E-mail: equipsales@hatcocorp.com

Form No. SR Spec Sheet

Printed in U.S.A.
January 2009

ITEM#

SERV-RITE™ PORTABLE BUFFET WARMERS

Models SRB-1, SRBW-1
SRG-1, SRGBW-1

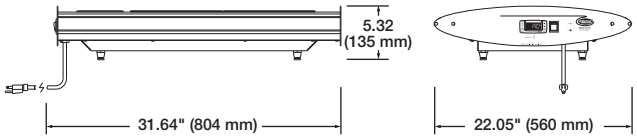

SRB Model

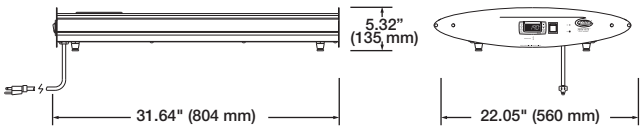

SRG Model

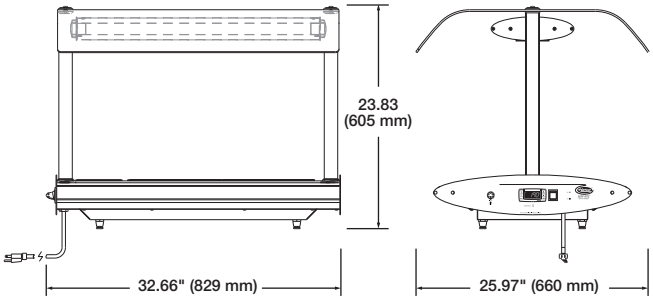

SRBW Model

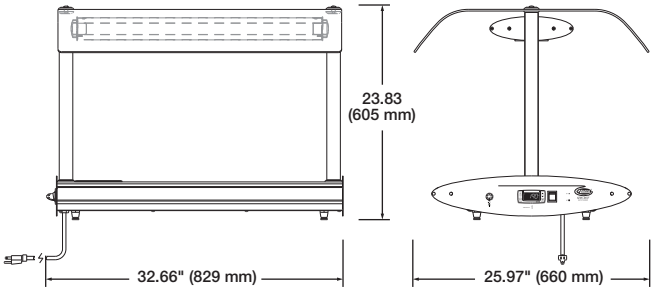

SRGBW Model

SPECIFICATIONS

Model	Watts	Amps	Width	Shipping Weight
SRB-1	500	4.2	31.64" (804 mm)	42 lbs. (19 kg)
SRBW-1	1100	9.2	32.71" (831 mm)	68 lbs. (31 kg)
SRG-1	350	2.9	31.64" (804 mm)	35 lbs. (16 kg)
SRGBW-1	950	7.9	32.71" (831 mm)	61 lbs. (28 kg)

DIMENSIONS

SRB-1: 31.64"W x 22.05"D x 5.32"H (804 x 560 x 135 mm).
SRBW-1: 32.66"W x 25.97"D x 23.83"H (829 x 660 x 605 mm).
SRG-1: 31.64"W x 22.05"D x 5.32"H (804 x 560 x 135 mm).
SRGBW-1: 32.66"W x 25.97"D x 23.83"H (829 x 660 x 605 mm).

VOLTAGE

120V, single phase only. Export voltages available.

CORD LOCATION

Control side.

PLUG CONFIGURATION

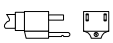		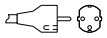
NEMA 5-15P	BS-1363	CEE 7/7 Schuko

ACCESSORIES

- ❑ Carving Station Pan (removable spiked perforated insert and juice collection tray for SRB-1 and SRBW-1 models only)
- ❑ Half-size Stainless Steel Pan

OPTIONS

- ❑ Single-sided, right- or left-handed sneeze guard.

PRODUCT SPECS

Portable Buffet Warmer

The Portable Buffet Warmers shall be a Serv-Rite™ Model …. as manufactured by the Hatco Corporation, Milwaukee, WI 53234 U.S.A.

With 24/7 parts and service assistance (U.S. and Canada only), the Portable Buffet Warmers shall be rated at …. watts, …. volts, and …. inches (millimeters) in overall width. It shall consist of food-safe material, thermostatically-controlled heated base, halogen overhead heat (SRBW-1 and SRGBW-1 models only) and a 6' (1829 mm) cord with plug attached.

HATCO CORPORATION P.O. Box 340500 Milwaukee, WI 53234-0500 U.S.A. • (800) 558-0607 • (414) 671-6350
Fax (800) 543-7521 • Int'l. Fax (414) 671-3976 • www.hatcocorp.com • E-mail: equipsales@hatcocorp.com

Form No. SR Spec Sheet

Printed in U.S.A.
January 2009