Ice-O-Matic
Ice. Pure and Simple™

GEM0450 - Pearl Ice® Maker

GEM0450 on IOD150

Features

- Space saving 21" (533 mm) wide design.
- Produces up to 464 lbs (210 kg) of ice per day.
- *Pearl Ice®* soft, chewable ice crystals.
- Cools beverages faster and longer while maintaining flavors better.
- Decreased water and power usage compared to cube ice makers.
- *SystemSafe* load monitoring system constantly checks workload on gearbox shutting down system before a problem develops preventing costly repairs.
- Water Sensor eliminates low or no water failures and cannot be affected by adverse water conditions.Rugged stainless steel evaporator and auger ensures reliability.
- Rugged stainless steel evaporator and auger ensures reliability.
- Industrial-grade roller bearings and heavy duty gearbox provide years of trouble free service.

Options & Accessories

Water Filters			
Ice Machine Model	Manifold		Inline
	System	Replacement	System
GEM0450	IFQ1	IOMQ (1)	N/A

Ice Maker Warranty

Every Ice-O-Matic ice maker is backed by a warranty that provides both parts and labor coverage.

Parts & Labor

- Three years **Parts & Labor** for all Pearl Ice® ice maker parts.
- Five years **Parts** coverage on the compressor.

Ice Form

Bin Chart

Kits for Combining Wider Bins with Smaller Models

	Ice Storage Bins								
	Model No. Capacity Width	B25 255 lbs (116 kg) 30 in (762 mm).	B40 365 lbs (165 kg) 30 in (762 mm)	B42 374 lbs (170 kg) 22in (559 mm)	B55 556 lbs (252 kg) 30 in (762 mm)	B100 927 lbs (420 kg) 48 in (1219 mm)	B120 1193 lbs (541 kg) 48 in (1219 mm)	B150 1499 lbs (679 kg) 60 in (1524 mm)	B170 1866 lbs (846 kg) 60 in (1524 mm)
Kits	GEM0450	KBT19	KBT19	KBT24	KBT19	KBT23	KBT23	N/A	N/A
	GEM0450 (2)	N/A	N/A	N/A	N/A	KBT22	KBT22	N/A	N/

**See Ice-O-Matic Price List for Adapter Kits to combine ice makers with most available ice/beverage dispensers.*

Ice-O-Matic ISO 9001 Certified

GEM0450 Pearl Ice® Maker

11100 E. 45th Avenue
Denver, CO 80239

Phone: 1. 866. PURE. ICE
Fax: 303. 371.6296
www.iceomatic.com

Rev: A-02/10
Part: 7000

Ice-O-Matic
Ice. Pure and Simple™

GEM0450 Pearl Ice® Maker

Air Cooled

Please note: air-cooled units require 6". (152 mm) clearance for air intake and exhaust.

A. Ice maker potable water in, ⅜" flare.
B. Ice maker water out, ¾" FPT.
C. Electrical inlet.

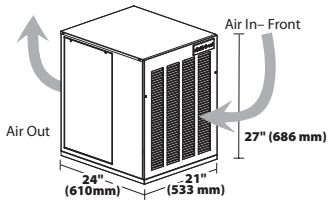

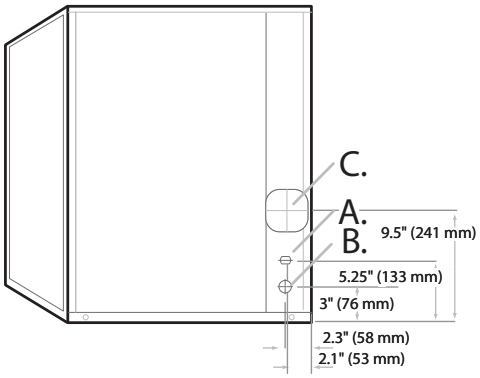

Rear View Air Cooled

Water Cooled

A. Ice maker water in, ⅜" flare.
B. Ice maker water out, ¾" FPT.
C. Electrical inlet.
D. Condenser water in, ⅜" (water cooled only).
E. Condenser water out, ½" (water cooled only).

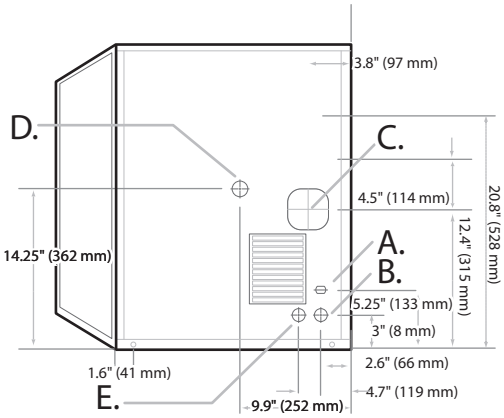

Rear View Water Cooled

Operating Requirements

	Minimum	Maximum
Ambient Temp. Range Air	50˚F (10˚C)	100˚F (38˚C)
Water Temp.	40˚F (4.4˚C)	100˚F (38˚C)
Water Pressure	20 PSIG (1.4 BAR)	120 PSIG (8.3 BAR)

Dimensions

All Models	
W x D x H (inches)	21 x 24 x 27
W x D x H (mm)	533 x 610 x 686

Specifications

Model Number	Cond. Unit	Ice Production per 24hrs 70°F/21°C air 50°F/10°C water lbs (kg)	Ice Production per 24hrs 90°F/32°C air 70°F/21°C water lbs (kg)	Water Usage per 100lbs (45kg) of ice 90°F/32°C air 70°F/ 21°C water Potable gal (l)	Water Usage Condenser gal (l)	kWH Used per 100 lbs (45 kg) of ice @ 90°F/ 32°C air 70°F/21°C water	Voltage	Min. Circuit Amps	Fuse Size	Approx. BTUs per hour
GEM0450A	Air	464 (210)	354 (161)	12.0	-	5.31	115/60/1	16.0	20	5,600
GEM0450W	Water	508 (230)	429 (195)	12.0	68.5	4.11	115/60/1	14.4	20	5,600

NOTES:
Number of Wires: 3 (including ground)
Approx. Shipping Weight *lbs (kg)*: GEM0450A 205 (93) • GEM0450W 220 (110)
Refrigerant Type: R404A

11100 E. 45th Avenue
Denver, CO 80239

Phone: **1. 866. PURE. ICE**
Fax: **303. 371.6296**
www.iceomatic.com

Rev: **A-02/10**
Part: **7000**