T&S BRASS AND BRONZE WORKS, INC.

2 Saddleback Cove / P.O. Box 1088
Travelers Rest, SC 29690

Travelers Rest, SC: 800-476-4103 Simi Valley, CA: 800-423-0150 www.tsbrass.com

REG. #A2601
ISO #9001

Model No.
B-0290

Item No.

This Space for Architect/Engineer Approval

Job Name_____Date_____

Model Specified_____ Quantity_____

Customer/Wholesaler_____

Contractor_____

Architect/Engineer_____

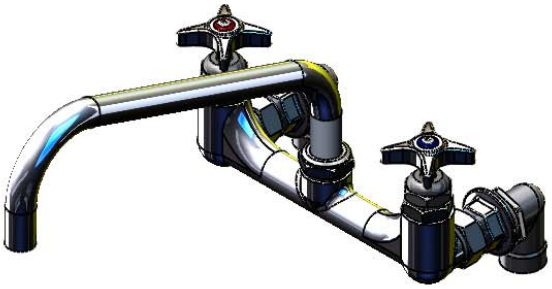

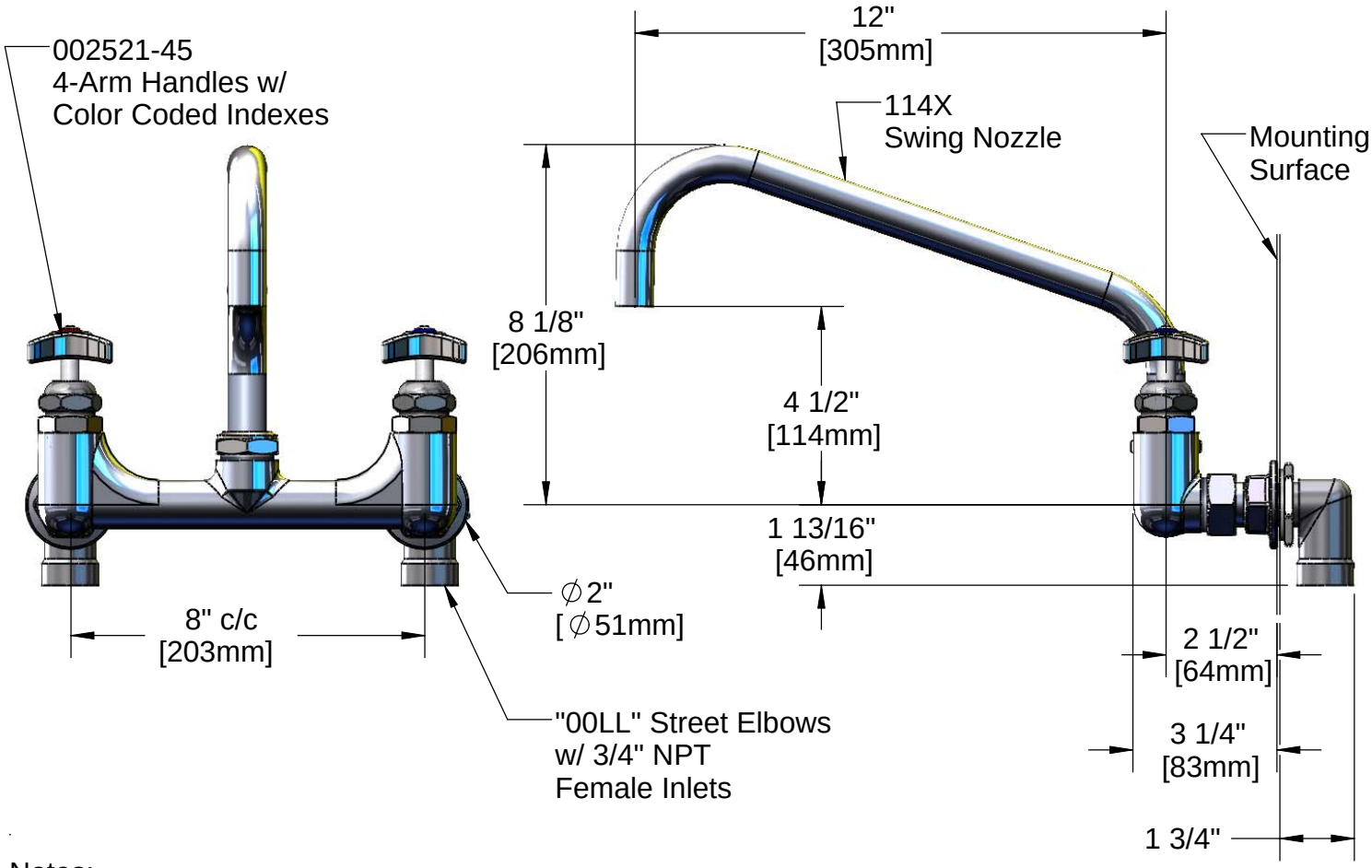

Notes:

1. This Model Includes "00LL" Street Elbows. When Not Required, ∅2" Flange Inlets of Faucet is 3/4" NPT Female.
2. Rough-In Requirements ∅1 1/4" Holes in Mounting Surface.

Product Specifications:

Kettle & Pot Sink Mixing Faucet w/ 12" Swing Nozzle, 4-Arm Kitchen Handles, Color Coded Indexes & "00LL" Street Elbows

Drawn	Checked	Approved
KJG	DHL	JHB
Scale: 1:4		Date: 06/19/08

T&S BRASS AND BRONZE WORKS, INC.

2 Saddleback Cove / P.O. Box 1088
Travelers Rest, SC 29690

REG. #A2601
ISO #9001

Travelers Rest, SC: 800-476-4103 Simi Valley, CA: 800-423-0150 Fax: 864-834-3518 www.tsbrass.com

Model No.
B-0290

Item No.

ITEM NO.	SALES NO.	DESCRIPTION
1	000922-45	Lever Handle Screw
2	001661-45	Red Index-HW
3	002521-45	4-Arm Handle
4	006482-40	Spindle Asm, B-290
5	000764-20	Seat, B-290 RM
6	001660-45	Blue Index-CW
7	114X	12" Big Flow Swing Nozzle
8	001068-45	O-ring (-118)
9	001019-45	Coupling Nut Washer
10	00BB	Flange Assembly
11	001005-45	Washer
12	00LL	'LL" Flange Assembly

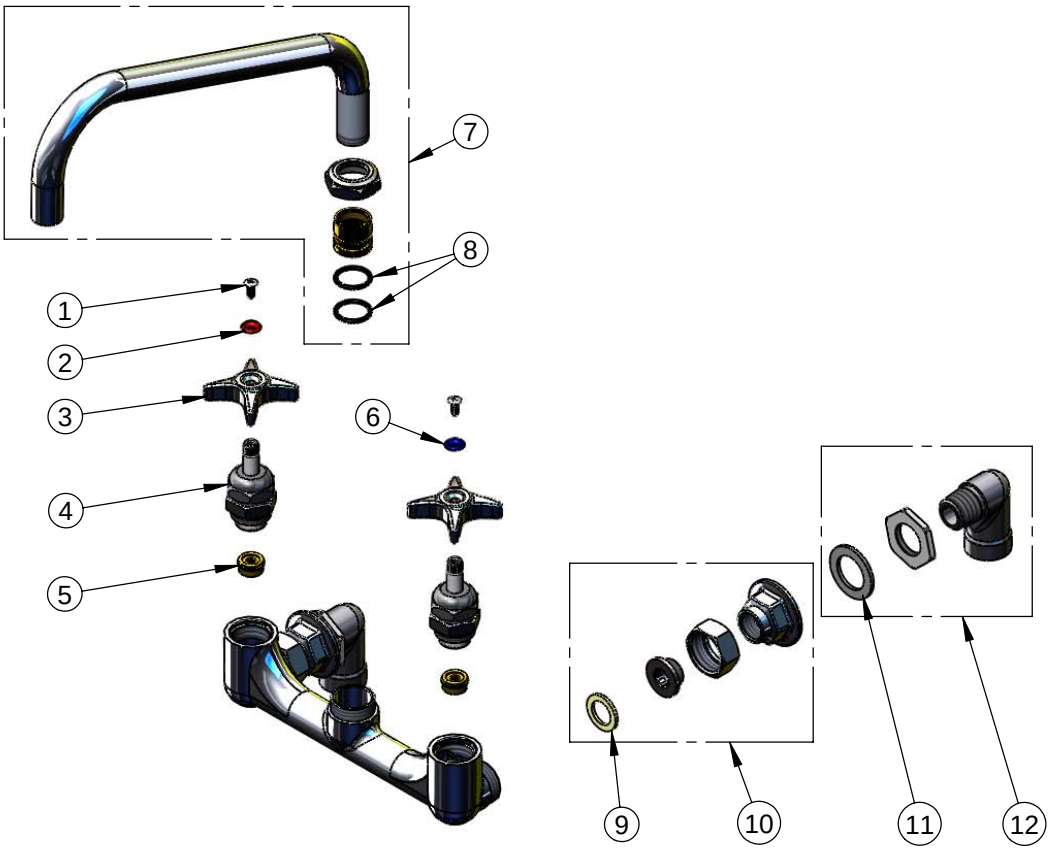

Product Specifications:

Kettle & Pot Sink Mixing Faucet w/ 12" Swing Nozzle, 4-Arm Kitchen Handles, Color Coded Indexes & "00LL" Street Elbows

Drawn	Checked	Approved
KJG	DHL	JHB
Scale: NTS		Date: 06/19/08