Scotsman®

ERC Series

Air Cooled Remote Condensers

ERC402

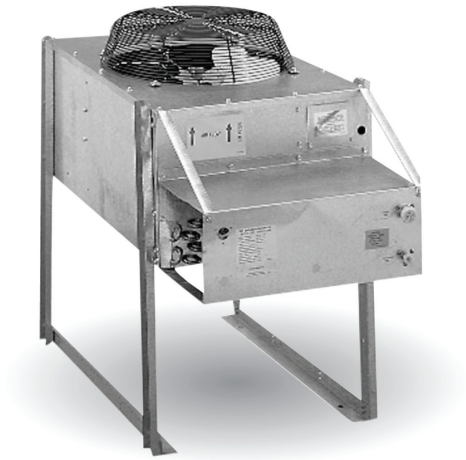

ERC311

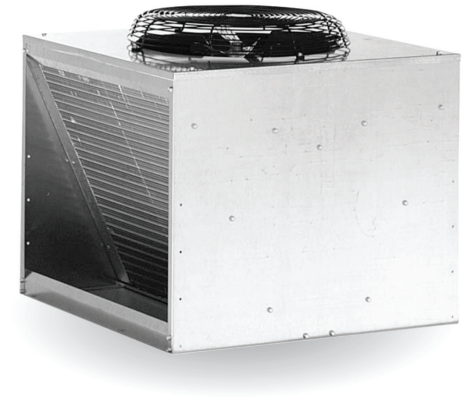

Features

Operate in wide outdoor temperature range from -20ºF to 120ºF.

Single or double circuit for single or double unit installations.

Heavy gauge galvanized steel for corrosion resistance.

Thermally protected fan motors.

PVC coated steel fan guards.

Direct drive fan blades.

Standard Aero-Quip fittings.

Options

Choice of pre-charged, insulated, refrigerant line sets with easy to install quick-connect couplings. Available in 10 ft., 25 ft., 40 ft. and 75 ft. lines

c UL US

CERTIFIED ISO 9001:2000

Warranty

• 3 years parts and labor on all components.

Warranty valid in North, South & Central America.
Contact factory for warranty in other regions.

Scotsman Ice Systems
775 Corporate Woods Parkway
Vernon Hills, IL 60061

1-800-SCOTSMAN
Fax: 847-913-9844
E-mail: customer.service@scotsman-ice.com

www.scotsman-ice.com

Scotsman®

The smart choice in ice.™

ERC - Horizontal Coil Series

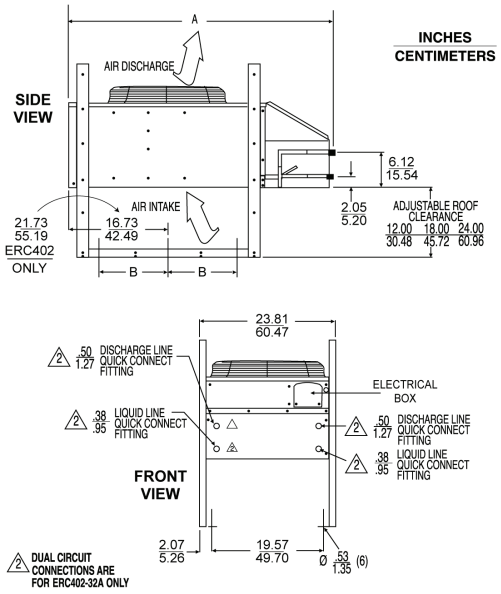

ERC - Vertical Coil Series

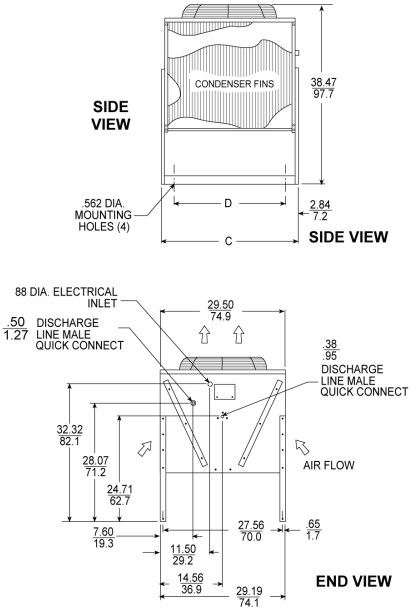

ERC Horizontal Coil Series

Model Number	A Overall Length	B Mounting Hole Spacing	Voltage	Circuit Wires	Min. Circuit Ampacity	Contains Headmaster?	Shipping Weight lb / kg	Shiping Carton W x D x H
ERC402-32A	44.125″	16.65″	208-230 / 60 / 1	2	2.6	No	140 / 64	29 x 55 x 22 (73.6 x 139.7 x 55.9 cm)

Note: This unit has a galvanized finish, is 23.8125″ wide and has adjustable height legs. Heights are 12″, 18″ and 24″. Total height with legs is 29.25″ or 35.25″ or 41.25″. This unit is designed to be powered by the ice machine it is connected to. The minimum circuit ampacity and maximum fuse size of the ice machine includes the requirements of the remote condenser.

ERC Vertical Coil Series

Model Number	C Overall Length	D Mounting Hole Spacing	Voltage	Circuit Wires	Min. Circuit Ampacity	Contains Headmaster?	Shipping Weight lb / kg	Shiping Carton W x D x H
ERC111-1A	29.125″	23.54″	115 / 60 / 1	1	2.7	Yes	95 / 43	32 x 31 x 34 (81.3 x 78.7 x 86.4 cm)
ERC311-32A	29.125″	23.54″	208-230 / 60 / 1	1	2.6	Yes	130 / 59	32 x 34 x 34 (81.3 x 78.7 x 86.4 cm)
ERC611-32A	37.75″	32.16	208-230 / 60 / 1	1	1.9	Yes	140 / 64	31 x 33 x 39 (81.3 x 78.7 x 99.1 cm)

Note: All units have a galvanized finish, are 29.5″ wide and 38.5″ high with legs. These units are designed to be powered by the ice machine they are connected to. The minimum circuit ampacity and maximum fuse size of the ice machine includes the requirements of the remote condenser. All but the ERC611 have 1/2″ discharge and 3/8″ liquid line connections. The ERC611 has a 5/8″ discharge line connection.

Options: KERCF air filter kit fits ERC111-1A and ERC311-32A

Operating Requirements

	Minimum	Maximum
Air Temperatures	50°F (10°C)	100°F (38°C)
Water Temperatures	40°F (4.4°C)	100°F (38°C)
Remote Cond. Temps	-20°F (-29°C)	120°F (49°C)
Water Pressures	20 PSIG (1.4 bar)	80 PSIG (5.5 bar)
Electrical Voltage	-10%	+10%

Specifications and design are subject to change without notice.

Scotsman Ice Systems
775 Corporate Woods Parkway
Vernon Hills, IL 60061

1-800-SCOTSMAN
Fax: 847-913-9844
E-mail: customer.service@scotsman-ice.com

www.scotsman-ice.com

© 2009 Scotsman Ice Systems.