Anets SilverLine™ 18″ Gas Fryer

Model SLG100

Item No.

Built To Anets Standards, Priced For Today's Market

Anets provides the highest value in frying with the new SLG100 18″ gas fryer. Ideal for both batch cooking and large volumes load after load. The heating system has been engineered for maximum efficiency and cleanability. To achieve optimum cooking capacity this fryer requires only 150,000 BTU input, using 4 burner tubes equipped with computer designed radiants. Higher BTUs for fast recovery and rapid oil heat up result in limited oil absorption and great tasting food. Center mounted snap action thermostat responds quickly to fry loads. The Anets SLG100 is built to perform, easy to clean and priced to purchase today.

STANDARD FEATURES

- Pulse Ignitor (No electrical required)
- Stainless steel front, door and trim are standard features
- 150,000 BTUH from only four tubes, easiest model on the market to clean
- Computer designed radiants enable the burners to efficiently reach 37,500 BTUH per burner tube
- The unique tapered elliptical tubes provide 14% more heat transfer area than competitive models (see **Design Features** on back)
- Outstanding serviceability, all components easily accessible and replaceable from the front
- Stainless steel basket hanger lifts off for easy cleaning
- Food particles fall below burner tubes into cold zone to prolong shortening life
- Large 1¼″ ball-type full port drain valve prevents clogging

SLG100 shown with 6″ adjustable legs.

ANETS SilverLINE™

Anetsberger Brothers, Inc. ▪ *Dependable Foodservice Equipment*
180 North Anets Drive ▪ Northbrook, Illinois 60062
1-800-837-2638 ▪ Fax 847-272-1943 ▪ www.anets.us

Anets SilverLine™ 18″ Gas Fryer

Model SLG100

SPECIFICATIONS

Model	SLG100, Stainless steel frypot
Certification	ETL, cETL, ETL Sanitation
Gas Input	150,000, BTU/hr.
Gas Pressure	NG 3.5″ WC, LP 10″ WC
Gas Connection	1/2″ NPT
Electrical Requirements	None
Thermostat	Snap action millivolt control
Temperature Range	175°-375°F (79°-190°C)
Hi-Limit	Safety control turns off gas supply at 428°F (220°C)
Safety Pilot	100% gas shut off valve
Burners	Cast iron, atmospheric pre-mix
Frypot	Stainless steel
Cabinet	Door, stainless steel Backsplash, stainless steel Basket Hanger, stainless steel
Shortening Capacity	70-100 lbs
Cooking Capacity	90 lbs of fries per hour
Frying Area	18″ x 18″ (46cm x 46cm)
Shipping Weight	200 lbs.
Warranty	1 year parts and labor Stainless steel frypot: 5 years (pro-rated)

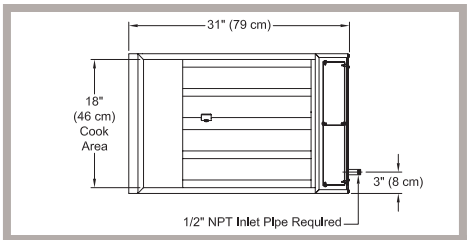

Top View

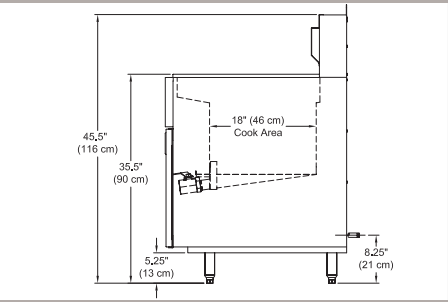

Side View

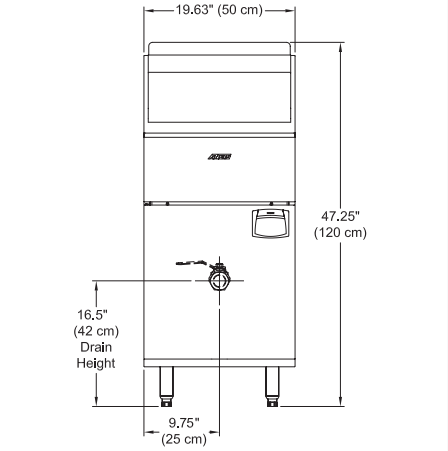

Front View

STANDARD ACCESSORIES

- 2 Twin nickel plated baskets
- Rack type basket support
- 6″ Adjustable legs
- Drain pipe extension
- Flue extension/Diverter

OPTIONS AND ACCESSORIES

- Single or triple baskets
- Casters
- Drain Table
- Fryer Cover

DESIGN FEATURES

- Easier to clean
- Optimum access to cold zone

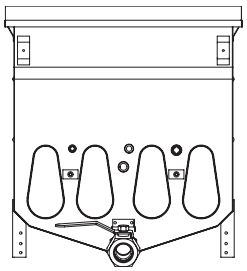

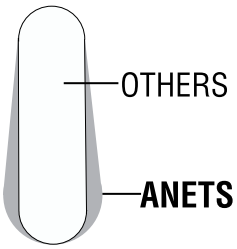

Tapered Elliptical Shape

- 14% more surface area for heat transfer
- Food particles cannot accumulate on top of tubes

Specifications subject to change without notice.
SS#566 Revised 12/05
Printed in the U.S.A.
Anetsberger Brothers reserves the right to replace a SilverLine product rather than replacing a fry pot.

Anetsberger Brothers, Inc. ■ Dependable Foodservice Equipment
180 North Anets Drive ■ Northbrook, Illinois 60062
1-800-837-2638 ■ Fax 847-272-1943 ■ www.anets.us