Metalfrio | Solutions

# BEER SUPER COOLER COUNTERTOPS

## Exclusively Designed to Increase Beer Sales by Promoting Sub-Frozen Temperatures

Model VN-12C

Model VN-12R

## FEATURES

- Large lighted LED temperature display
- Black baked on enamel exterior, white sheet metal interior
- Frost free system
- Automatic defrost by thermostat cycle
- Finned evaporator with cold air forced ventilation
- Recessed door handle (VN-12C)
- Hinged anti-fogging tempered glass door with auto close (VN-12R)
- Hinged insulated solid door with auto close (VN-12C)
- Illuminated lightbar for branding display
- Interior light
- Operating range: +26° to +30° F
  *Note: Super cold temperatures for beer sales only, not suitable for cola*
- Refrigerant CFC-free R-134a
- 7-ft power cord with surge protector plug-in
- Packout:
  - 12 oz beer cans - 96
  - 12 oz beer long neck bottles - 56
  - 20 oz beer bottles - 42

## OPTIONS

- Custom graphics

## SPECIFICATIONS

| Model | Adjustable Shelves | External Dimensions W x D x H | Gross Cu Ft | Net Cu Ft | Shipping Weight | Amps | H/P | Electrical |
|---|---|---|---|---|---|---|---|---|
| VN-12C | 1 + 1* | 22.4" x 26.2" x 33.5" | 4.5 | 3.3 | 137 | 6.5 | 1/3 | 115/120V, 60Hz |
| VN-12R | 1 + 1* | 22.4" x 26.2" x 33.5" | 4.5 | 3.3 | 137 | 6.5 | 1/3 | 115/120V, 60Hz |

*1 Adj shelf & 1 Bottom Shelf

**Internal Dimensions**

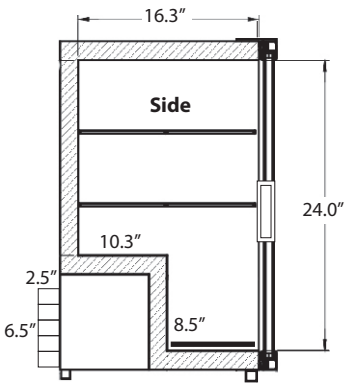


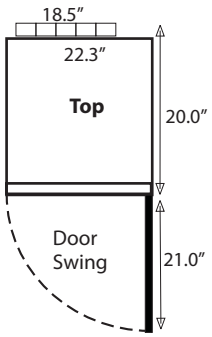


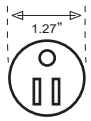


NEMA 5-15P

**WARRANTY**
*18 Months Parts and Labor*
*5 Years Compressor (part only)*

*Administered by:*
*Metalfrio Solutions*
*(888) 403-0070 Toll Free*

CANADIAN ENERGY PERFORMANCE VERIFIED RENDEMENT ENERGETIQUE VERIFIED
EP3157011

Certified to UL Std 197 & ANSI/NSF 7 Standards


Metalfrio Solutions, Inc.
110 Enterprise Parkway - Boerne, TX 78006
(888) 403-0070 Toll Free - (888) 339-1904 Toll Free Fax
www.metalfriosolutions.com - sales@metalfrio.com


Effective Date - January, 2010