turbofan®

TECHNICAL DATA SHEET FOR

E27M2 ON THE SK2731U STAND

Full Size Manual / Electric Convection Oven on a Stainless Steel Stand

STANDARD FEATURES

- 2 full size sheet pan capacity
- 4½"/ 115mm tray spacing
- Compact 31⅞"/ 810mm width
- Bi-directional reversing fan system
- 2.8kW heating (220-240V) / 2.5kW heating (208V)
- 15A plug-in (NEMA 6-15P cordset fitted)
- Porcelain enameled oven chamber
- Plug-in continuous oven door seal
- Safe-Touch vented drop down door
- Stay-Cool door handle
- Heavy-duty door hinges
- Easy clean door glass system
- Mechanical thermostat 150-550°F / 50-260°C
- 60 minute timer with time up alarm
- Dual halogen oven lamp
- Dia. 7" / 180mm full stainless steel oven fan
- Anti-skid 2" / 50mm dia. 3" / 76mm high adjustable stainless steel feet
- 2 oven wire racks supplied
- 100% recyclable packaging

ACCESSORIES

- Turbofan SK2731U Oven Stand

E27M2

Unit shall be a Moffat electrically heated Turbofan convection oven E.T.L. listed and NSF-4 listed. The oven shall have a one piece porcelain enameled oven chamber, stainless top and sides and safe touch vented easy clean drop down door. Oven shall have capacity for two full size sheet pans. The oven shall have 2.8kW heating elements for 220-240V models or 2.5kW heating elements for 208V models. The oven shall have a bi-directional single reversing fan system. The oven shall be controlled by a mechanical thermostat with a range of 150-550°F / 50-260°C, a 60 minute bake timer, and feature dual halogen oven lamps. Oven shall be able to be bench mounted on 3" / 76mm feet or mounted on oven stand model SK2731U. Oven shall be fitted with a NEMA 6-15P cordset. Unit shall be supplied in 100% recyclable shipping packaging.

SK2731U

Unit shall be a Moffat Turbofan stainless steel oven stand NSF-4 listed. The stand shall be constructed from stainless steel tube with castors, with front castors having dual swivel and wheel locks. It shall be fitted with 6 tray runners suitable for up to 12 half size sheet pans or 6 full size sheet pans. The stand shall be fully compatible with, and support, Turbofan Convection Oven models E27M2, E27M3, E28M4, and E31D4. Unit shall be supplied in 100% recyclable shipping packaging.

MOFFAT®

turbofan®
CONVECTION OVEN SYSTEMS

20MSERIES

turbofan®

E27M2 Full Size Manual / Electric Convection Oven on a Stainless Steel Stand

CONSTRUCTION
Porcelain enameled fully welded oven chamber
Stainless steel front, sides and top exterior
Stainless steel oven fan baffle and oven vent
Removable 2 position chrome plated wire side racks
Oven racks chrome plated wire (2 supplied)
Stainless steel frame drop down hinged door
0.2" / 5mm thick door outer glass
0.2" / 5mm thick low energy loss door inner glass
Heavy-duty counterbalanced door hinges
Wear resistant powder coated welded door handle
Stainless steel control panel
Aluminized coated steel base and rear panels

CONTROLS
Power ON control panel indicator
Mechanical thermostat 150-550°F / 50-260°C
Heating ON control panel indicator
Manual 60 minute timer
Time-Up control panel indicator and buzzer
Over-temperature safety cut-out

CLEANING
Stainless steel top and sides continuous exterior panel
Porcelain enameled oven chamber
Fully removable chrome plated oven side racks
Removable stainless steel oven fan baffle
Full stainless steel oven fan
Easy clean door system with hinge out door inner glass (no tools required)
Removable plug-in oven door seal (no tools required)
3" / 76mm high stainless steel feet for easy access underside

SPECIFICATIONS

Electrical Requirements
208V, 50/60Hz, 1-phase, 2.7kW, 13A
220-240V, 50/60Hz, 1-phase, 3.0kW, 12A
NEMA 6-15P cordset fitted

External Dimensions
Width 31⅞"/ 810mm
Height 23 ⅞" / 607mm including 3" / 76mm feet
Depth 30" / 762mm

Oven Internal Dimensions
Width 27⅜" / 695mm
Height 12" / 305mm
Depth 18½" / 470mm
Volume 3.53ft³ / 0.10m3

Oven Rack Dimensions
Width 26" / 660mm
Depth 18" / 460mm

Nett Weight (E27M2)
133lbs / 60.2kg

Packing Data (E27M2)
172lbs / 77.8kg
19.4 ft³ / 0.55m3
Width 34¼" / 870mm
Height 29¾" / 755mm
Depth 32⅞" / 835mm

SK2731U Stainless Steel Stand

All stainless steel welded frame oven stand for Turbofan E27, E28 and E31 Series model ovens
6 position tray runners standard
3" / 76mm diameter wheel swivel castors standard with 2 front castors with dual swivel and wheel
Welded 1 ½" and 1 ¼" square tube front and rear frames
Welded rack supports/side frames
4 dia. 3" / 76mm swivel castors with 2 front castors dual wheel and swivel lock
Top frame oven supports suit Turbofan E27, E28 and E31 Series oven mounting
Supplied CKD for assembly on site

External Dimensions (SK2731U Oven Stand)
Width 31⅞" / 810mm
Height 34⅝" / 880mm
Depth 25⅝" / 650mm

Nett Weight (SK2731U Oven Stand)
43lbs / 19.5kg

Packing Data (SK2731U Oven Stand)
49lbs / 22kg
3.9ft3 / 0.11m3
Width 32⅝" / 830mm
Height 35½" / 900mm
Depth 6" / 152mm

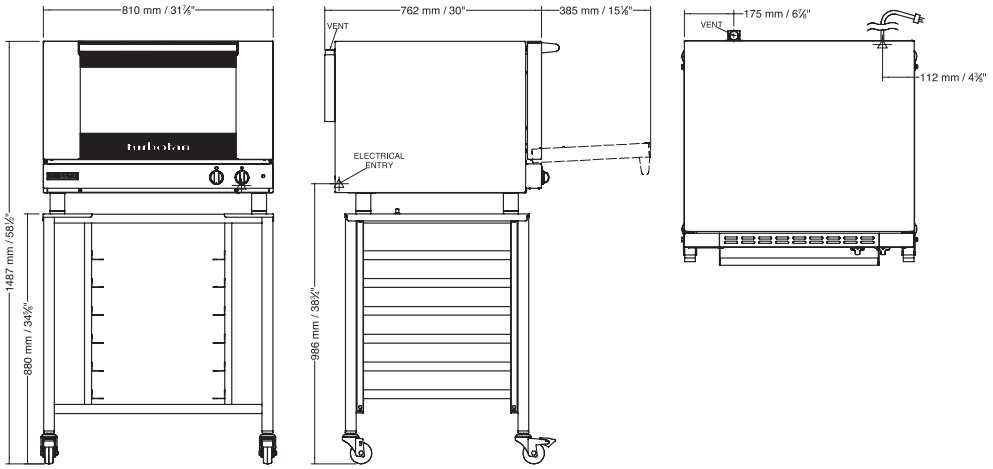

MOFFAT®
www.moffat.com

U.S.A.
Moffat Inc
3765 Champion Boulevard
Winston-Salem
North Carolina 27105
Ph Toll Free 1-800-551 8795
Ph 336-661 0257
Fax 336-661 9546
Email sales@moffat.com
www.moffat.com

Manufactured by:
Moffat Limited
16 Osborne Street PO Box 10-001
Christchurch 8081 New Zealand

ISO9001
Quality Management Standard

Designed and manufactured by
MOFFAT®

ISO9001
All Turbofan products are designed and manufactured by Moffat using the internationally recognised ISO9001 quality management system, covering design, manufacture and final inspection, ensuring consistent high quality at all times.

In line with policy to continually develop and improve its products, Moffat Limited reserves the right to change specifications and design without notice.

© Copyright Moffat Ltd

Moffat 5.10