Sirman Panini Grills

Elio - Cort - PD

- Cook virtually anything.
- Increase sales and profits and keep costs and maintenance low.
- Non-scratch, durable cast iron cooking surface.
- Need very little counter space.
- Easy to use and clean.
- One-year parts and labor warranty with full parts availability.

Distributed by:

eurodib

PD series

Specifications

10” x 20” cooking surface
The full-size panini grill, ideal for supermarkets and deli shops.

Construction: Stainless steel body with seasoned cast iron work surfaces.
Work Surfaces: One bottom surface, 19" (500 mm)wide, 10" (255 mm) deep.
Two top surfaces, 9 1/4" (235 mm) wide, 9 1/4" (235 mm) deep.
Top surfaces are independent and ajustable.
Work surface styles: Four models available:
PDR3000 : Top & bottom ribbed
PDF3000 : Top & bottom flat
PDL3000 : Top ribbed & bottom flat
PDM3000 : Left bottom side flat & remaining sides ribbed
Cooking temperature: Up to 570° F (300° C).
Electrical: 220 V AC, 60Hz, 15,7 A, 3450W.
Plug & Cord: Attached plug, flexible, 3 wires SJT AWG12, 5" long cord.
Controls: Two independant thermostats with off position.
Heating elements: Four: shock-proof, coated.
Timer: Up to 15 min.
Net Weight: 68 lbs (31 kg).
Shipping weight: 70 lbs (32 kg).
Shipping dimensions : 22 1/8" x 16 7/8" x 10 5/8" (560mm x 430mm x 270mm).

Other features

- The self-balancing top cooking surfaces allow for easy opening and closing, and stay in place
- The hinge mechanism can be simply adjusted with an Allan key (not supplied) without removing the spring cover.
- The 12 oz. capacity grease receptacle is front-mounted and easily removable thanks to two handles.
- The spring cover is removable for accesibility.
- The scraping brush is standard.

CORT series

Specifications

10” x 15” cooking surface
Medium-size for versatility and flexibility.

Construction: Stainless steel body with seasoned cast iron work surfaces.
Work Surfaces: Two, 14 1/2" (355mm)wide, 10" (255 mm) deep. Top surface is ajustable.
Work surface styles: Three models availables:
Cort-R : Top & Bottom ribbed
Cort-L : Ribbed top & flat bottom
Cort-F : Top & bottom flat
Cooking temperature: Up to 570° F (300° C).
Electrical: 120 V AC, 60Hz, 20 A, 1800W
220V, 60 Hz, 10 A,1800W
Plug & Cord: Attached plug, flexible, 3 wires SJT AWG14, 5" long cord.
Controls: One thermostats with off position.
Heating elements: Two: shock-proof, coated.
Timer: Up to 15 min.
Net Weight: 46 lbs (21 kg).
Shipping weight: 53 lbs (24 kg).
Shipping dimensions : 16 7/8" x 16 1/2" x 10 5/8" (430mm x 420mm x 270mm).

Other features

- The self-balancing top cooking surfaces allow for easy opening and closing, and stay in place
- The hinge mechanism can be simply adjusted with an Allan key (not supplied) without removing the spring cover.
- The 9oz. capacity grease receptacle is front-mounted and easily removable thanks to two handles.
- The spring cover is removable for accesibility.
- The scraping brush is standard.

Sirman Panini Grills

Elio - Cort - PD

Elio serie

Specifications

Construction: Stainless steel body with seasoned cast iron work surfaces.
Work Surfaces: Two, 9 7/8" (250mm)wide, 10" (255 mm) deep. Top surface is ajustable.
Work surface styles: Top & bottom ribbed.
Cooking temperature: Up to 570° F (300° C).
Electrical: 120 V AC, 60Hz, 15 A, 1800W (220V, 50 Hz available on request).
Plug & Cord: Attached plug, flexible, 3 wires SJT AWG14, 5" long cord.
Controls: One thermostats with off position.
Heating elements: Two: shock-proof, coated.
Timer: Up to 15 min.
Net Weight: 33 lbs (15 kg).
Shipping weight: 37 lbs (17 kg).
Shipping dimensions : 17 3/4" x 12 1/4" x 10 5/8" (450mm x 310mm x 270mm).

10" x 10" cooking surface
Compact size & low weight;
ideal for kiosks & concession stands.

Other features

- The self-balancing top cooking surfaces allow for easy opening and closing, and stay in place
- The hinge mechanism can be simply adjusted with an Allan key (not supplied) without removing the spring cover.
- The 6oz. capacity grease receptacle is front-mounted and easily removable thanks to two handles.
- The spring cover is removable for accesibility.
- The scraping brush is standard.

Dimensions

ELIO
A = 10 1/4" (260 mm)
B = 17 1/8" (435 mm)
C (closed) = 7" (178 mm)
C (open) = 19 3/4" (500 mm)

CORT
A = 15" (380 mm)
B = 17 1/8" (435 mm)
C (closed) = 7" (178 mm)
C (open) = 19 3/4" (500 mm)

PD
A = 20 1/4" (515 mm)
B = 17 1/8" (435 mm)
C (closed) = 7" (178 mm)
C (open) = 19 3/4" (500 mm)

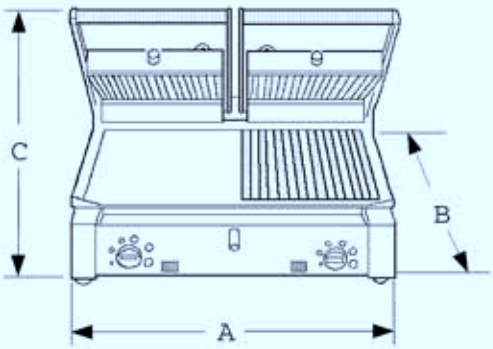

Electrical diagrams

Models: Cort & Elio

R1-R2 = Resistors
LS = Pilot Lamp
T1 = Thermostats

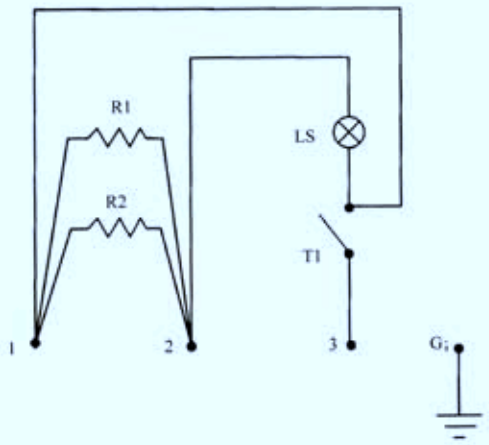

Terminal Board

CONNECTION 115 V MN / 220 ÷ 240 V MN

Models: PD

R1-R2-R3-R4 = Resistors
LS = Pilot Lamp
T1-T2 = Thermostats
M1-3 = Terminals

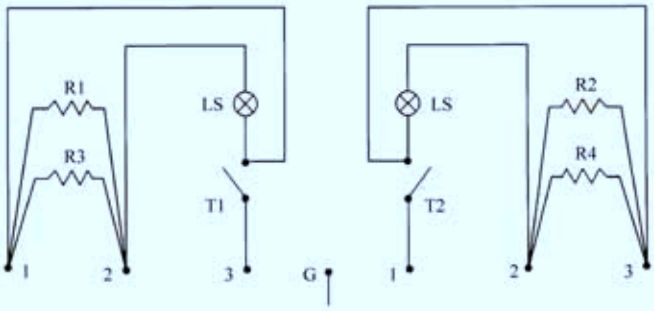

Terminal Board

CONNECTION 220 ÷ 240 V

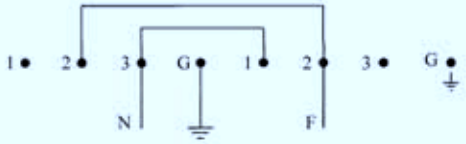

By SIRMAN For eurodib

Eurodib inc.
USA
PO Box 1798, 1320 Route 9, Champlain, NY, 12919
Canada
120 de la Barre, Boucherville, Qc, J4B 2X7
Toll free Ph) 888-956-6866 Fax)877-956-6867
www.eurodib.com