BOBRICK

Technical Data

PARTITION-MOUNTED TOILET-SEAT-COVER AND TOILET TISSUE DISPENSER

(SERVES TWO TOILET COMPARTMENTS)

B-3471

Mounts in partition of barrier-free toilet compartment for physically disabled persons. One side is flush against partition to allow clearance for grab bar across front of unit.

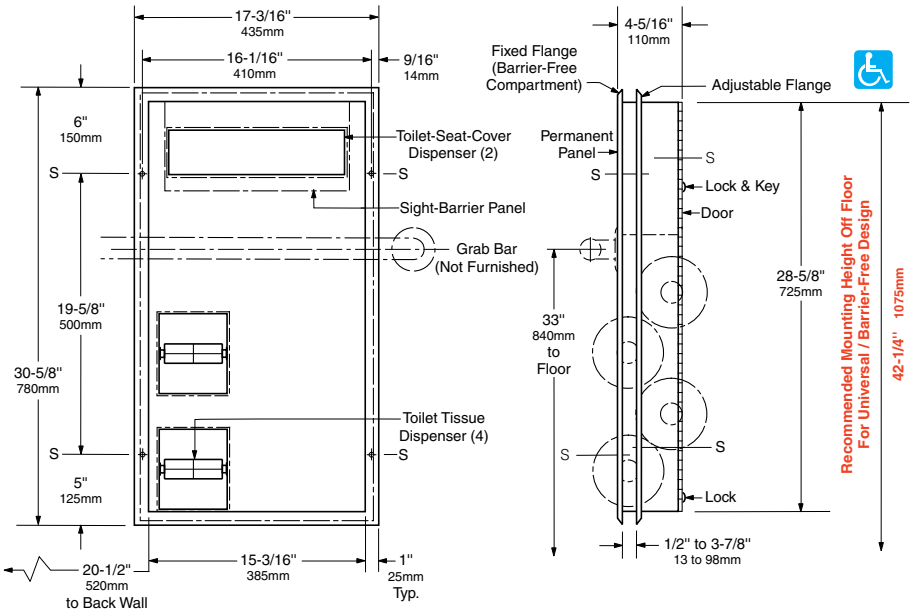

Rough Partition Cutout
15-1/2" (395mm) wide
28-7/8" (735mm) high
1/2" to 3-7/8" (13 to 98mm) partition thickness

MATERIALS:

Cabinet — 18-8 S, type-304, heavy-gauge stainless steel. All-welded construction. Exposed surfaces have satin finish. Equipped with a plastic sight-barrier panel for the toilet-seat-cover dispenser.

Flanges (2) — 18-8 S, type-304, 22-gauge (0.8mm) stainless steel with satin finish. Drawn and beveled, one-piece, seamless construction.

Door & Permanent Panel — 18-8 S, type-304, 18-gauge (1.2mm) stainless steel with satin finish. One-piece, seamless construction. Door is secured to cabinet with a full-length stainless steel piano-hinge and equipped with two tumbler locks keyed like other Bobrick washroom accessories.

Toilet Tissue Dispensers (4) — .100" (2.5mm) thick ABS. Equipped with four theft-resistant, heavy-duty, one-piece, molded ABS spindles.

OPERATION:

Toilet-seat-cover dispenser is serviced from one side and holds 1000 single- or half-fold paper covers. Door unlocks with key provided and swings open for filling. Spindles may be removed from cabinet when door is open; when door is closed, removal requires a special key provided for the concealed locking mechanism in spindles. Unit holds four standard-core toilet tissue rolls up to 5-1/4" (135mm) diameter (1800 sheets), two for each compartment.

Designer's Note: It is recommended that one full toilet tissue roll remain wrapped until the other roll has been depleted to avoid wasting ends of both rolls.

continued . . .

The illustrations and descriptions herein are applicable to production as of the date of this Technical Data Sheet.
The manufacturer reserves the right to, and does from time to time, make changes and improvements in designs and dimensions.

Rev. 5/06 R/A, S/C Printed in U.S.A.
© 2006 by Bobrick Washroom Equipment, Inc.

INSTALLATION:

Mount unit in toilet partition 1/2" to 3-7/8" (13 x 98mm) thick, centered through a cutout specially ordered from partition manufacturer or field cut. Dimensions of cutout are to be 15-1/2" wide x 28-7/8" high (395 x 735mm). Top of cutout should be 42-1/4" (1075mm) from finish face of floor with rear edge of cutout 20-1/2" (520mm) from back wall of compartment to allow placement of horizontal grab bar at 33" (840mm) height across front of unit. For factory-made cutouts, location and size details must be furnished to partition manufacturer. For hollow-core metal partitions, provide solid framing into which sheet-metal mounting screws can be secured.

For installation with sheet-metal screws furnished, place unit firmly in partition cutout, making certain entire perimeter of fixed flange is flush with and tight against partition surface. Install the unit so the side that has the fixed flange flush with face of cabinet is in a barrier-free compartment for physically disabled persons. Secure to partition with sheet-metal screws through four mounting holes at points indicated by an *S*. On other side of partition, position adjustable flange (which serves as an escutcheon) so mounting holes are not inline with mounting holes in fixed flange. Make certain entire perimeter of adjustable flange is flush with and tight against partition surface before securing with sheet-metal screws furnished.

For through-bolting method of installation, make sure mounting holes in adjustable flange are inline with holes in fixed flange. Using adjustable flange as template to mark locations, drill 7/32" or 1/4" (5.5 or 6.4mm) holes through partition. Provide four binder posts and #6 (3.5mm) flat-head screws to secure unit and its adjustable flange. Obtain binder posts and screws by ordering Bobrick Binder Post Kit No. 354-119 for partitions 1/2" (13mm) thick only or Kit No. 354-124 for partitions 3/4" to 1-1/4" (19 to 32mm) thick.

Note: Cutouts in Bobrick toilet partitions can be pre-cut for Bobrick partition-mounted accessories at factory if location and size of cutouts are specified and order for both partitions and accessories are received together.

SPECIFICATION:

Partition-mounted toilet-seat-cover and toilet tissue dispenser shall be type-304 stainless steel with all-welded construction; exposed surfaces shall have satin finish. Toilet tissue dispenser shall be ABS plastic. Flanges shall be drawn and beveled, one-piece, seamless construction. Unit shall mount in partition and serve two toilet compartments. One side of unit shall mount flush against partition of barrier-free compartment to allow clearance for grab bar across front of unit. Door shall be one-piece, seamless construction; secured to cabinet with a full-length stainless steel piano-hinge; and equipped with two tumbler locks keyed like other Bobrick washroom accessories. Toilet-seat-cover dispenser shall be serviced from one side only, be equipped with a plastic sight-barrier panel, and hold 1000 paper covers. Unit shall be equipped with four theft-resistant, heavy-duty ABS toilet tissue spindles that hold standard-core rolls up to 5-1/4" (135mm) diameter (1800 sheets). Spindles shall be removable from cabinet when door is open; when door is closed, removal shall require a special key provided for the concealed locking mechanism in spindles. Manufacturer's service and parts manual shall be provided to the building owner/manager upon request.

Partition-Mounted Toilet-Seat-Cover And Toilet Tissue Dispenser shall be Model B-3471 of Bobrick Washroom Equipment, Inc., Clifton Park, New York; Jackson, Tennessee; Los Angeles, California; Bobrick Washroom Equipment Company, Scarborough, Ontario; Bobrick Washroom Equipment Pty. Ltd., Australia; and Bobrick Washroom Equipment Limited, United Kingdom.

The illustrations and descriptions herein are applicable to production as of the date of this Technical Data Sheet.
The manufacturer reserves the right to, and does from time to time, make changes and improvements in designs and dimensions.

© 2006 by Bobrick Washroom Equipment, Inc.