Technical Data

ConturaSeries® RECESSED SANITARY NAPKIN DISPOSAL

B-4353

Patented

Rough Wall Opening
11-1/4" (285mm) wide
9-1/2" (240mm) high
4" (102mm) minimum
recessed depth

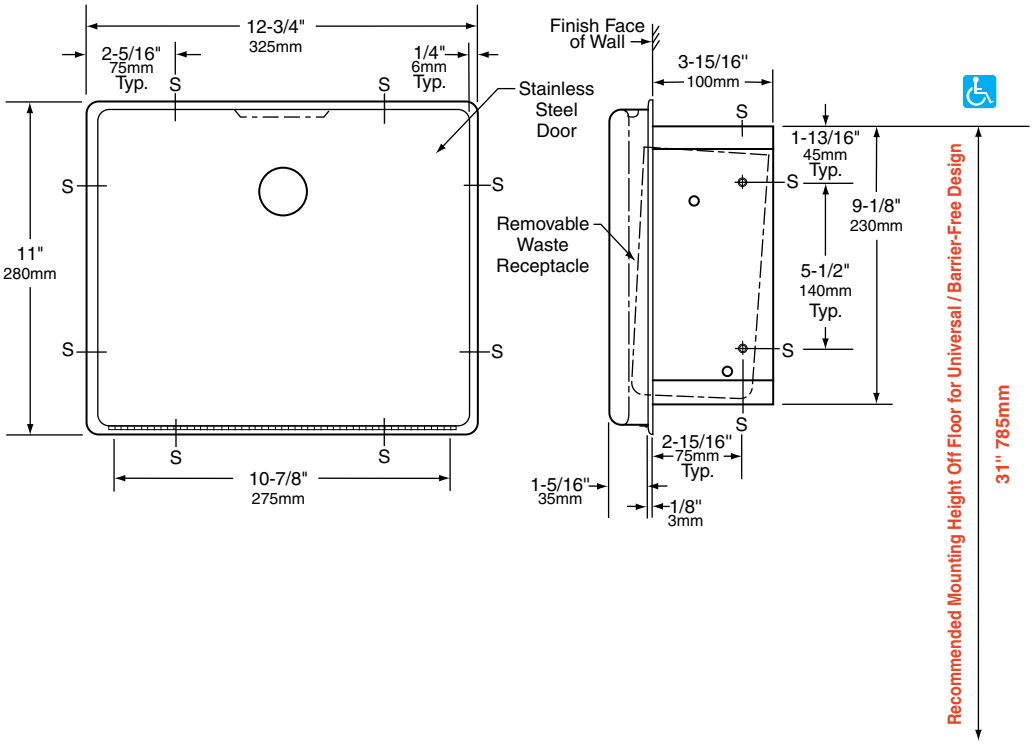

MATERIALS:

Cabinet — 18-8 S, type-304, 22-gauge (0.8mm) stainless steel. All-welded construction. Exposed surfaces have satin finish.

Flange — 18-8 S, type-304, 22-gauge (0.8mm) stainless steel with satin finish. Drawn, one-piece, seamless construction. Radius on corners and return edges complement corners and edges of door.

Door — 18-8 S, type-304, 22-gauge (0.8mm) stainless steel with satin finish. Drawn, one-piece, seamless construction. Front of door has same degree of arc as other Bobrick ConturaSeries washroom accessories. Radius on corners and edges of door complement other ConturaSeries accessories. Self-closing door is secured to cabinet with a spring-loaded, full-length stainless steel piano-hinge at bottom. Equipped with two stainless steel cable door-swing limiters, two hooks for retaining receptacle, a finger-pull recess at top for easy opening, and an international graphic symbol identifying sanitary napkin disposal.

Receptacle — Leak-proof molded polyethylene. Removable for servicing. Equipped with two slots for hanging on door hooks. Capacity: 1.2-gal. (4.6-L).

continued . . .

The illustrations and descriptions herein are applicable to production as of the date of this Technical Data Sheet.
The manufacturer reserves the right to, and does from time to time, make changes and improvements in designs and dimensions.

Revised 11/06 Printed in U.S.A.
© 2006 by Bobrick Washroom Equipment, Inc.

OPERATION:

For side wall of single toilet compartment. Self-closing door pulls down for access to disposal with less than 5 pounds of force (22.2 N) to comply with barrier-free accessibility guidelines (including ADAAG in U.S.A.). Receptacle is removable for servicing. Cable door-swing limiters prevent damage to washroom accessories and walls. Disposable paper liners for sanitary napkin receptacle are available from Bobrick as an optional accessory; order Part No. 353-12.

INSTALLATION:

Provide framed rough wall opening 11-1/4" wide x 9-1/2" high (285 x 240mm). Minimum recessed depth required from finish face of wall is 4" (102mm). Allow clearance for construction features that may protrude into rough wall opening from opposite wall. Coordinate with mechanical engineer to avoid pipes, vents, and conduits. If unit projects above top of wainscot, provide aluminum channel or other filler to eliminate gap between flange and finish face of wall. Mount unit in wall opening with shims between framing and cabinet at all points indicated by an *S*, then secure unit with #8 x 1-1/4" (4.2 x 32mm) sheet-metal screws (not furnished by manufacturer).

SPECIFICATION:

Recessed sanitary napkin disposal shall be type-304 stainless steel with all-welded construction; exposed surfaces shall have satin finish. Front of sanitary napkin disposal door shall have same degree of arc and match other Bobrick ConturaSeries® accessories in the washroom. Radius on corners and edges of flange and door shall complement other Bobrick ConturaSeries® washroom accessories. Flange shall be drawn, one-piece, seamless construction. Self-closing door shall be drawn, one-piece, seamless construction; secured to cabinet with a spring-loaded, full-length stainless steel piano-hinge; and equipped with two stainless steel cable door-swing limiters, two hooks for retaining receptacle, a finger-pull recess at top for easy opening, and an international graphic symbol identifying sanitary napkin disposal. Door shall pull down with less than 5 pounds of force (22.2 N) to comply with barrier-free accessibility guidelines (including ADAAG in U.S.A.). Unit shall be furnished with a removable, leak-proof, molded polyethylene receptacle. Receptacle shall have a capacity of 1.2-gal. (4.6-L). Manufacturer's service and parts manual shall be provided to the building owner/manager upon request.

Recessed Sanitary Napkin Disposal shall be Model B-4353 of Bobrick Washroom Equipment, Inc., Clifton Park, New York; Jackson, Tennessee; Los Angeles, California; Bobrick Washroom Equipment Company, Scarborough, Ontario; Bobrick Washroom Equipment Pty. Ltd., Australia; and Bobrick Washroom Equipment Limited, United Kingdom.

The illustrations and descriptions herein are applicable to production as of the date of this Technical Data Sheet.
The manufacturer reserves the right to, and does from time to time, make changes and improvements in designs and dimensions.

© 2006 by Bobrick Washroom Equipment, Inc.