BOBRICK

Technical Data

MatrixSeries™ SURFACE-MOUNTED MULTI-ROLL TOILET TISSUE DISPENSER

B-5288

Patented

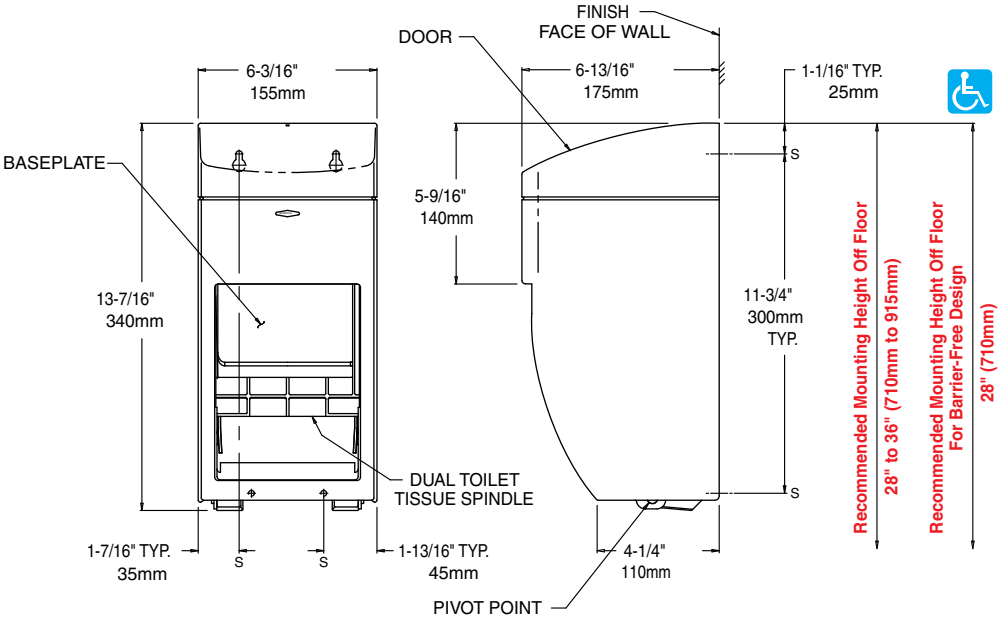

MATERIALS:

Mounting Plate — Durable, high-impact grey ABS. Equipped with a concealed locking device to secure door; keyed like other Bobrick washroom accessories.

Door — Durable, high-impact grey ABS with high-gloss finish on exposed surfaces. Front of door has same degree of arc as other MatrixSeries washroom accessories. Radius on corners, edges and top complement other MatrixSeries washroom accessories. Secured to mounting plate with two keyed pivots.

Dual Toilet Tissue Spindle — Durable, high-impact grey ABS. Retained in door when unit is locked.

OPERATION:

Unit holds two standard-core toilet tissue rolls up to 5-3/4" (145mm) diameter (2000 sheets). Toilet tissue rolls are loaded and locked into door. Extra roll is manually lowered into place when bottom roll is depleted. Depleted rolls can only be removed after unlocking door with key provided. Retrofit Tumbler Lock Kit is available as an optional accessory: order Bobrick Part No. 5288-10.

INSTALLATION:

For partitions with particle board or other solid core, secure with four sheet-metal screws (not furnished), or provide through-bolts, nuts, and washers.

For hollow-core metal partitions, provide solid backing into which sheet-metal screws (not furnished) can be secured. If two units are installed back-to-back, then provide threaded sleeves and machine screws for the full thickness of partition.

For plaster or dry wall construction, provide concealed backing to comply with local building codes, then secure unit with sheet-metal screws (not furnished).

For other wall surfaces, provide fiber plugs or expansion shields for use with sheet-metal screws (not furnished), or provide 3/16" (4.8mm) toggle bolts or expansion bolts.

SPECIFICATION:

Surface-mounted multi-roll toilet tissue dispenser shall be durable, high-impact grey ABS with high-gloss finish on exposed surfaces. Front of door shall have same degree of arc and match other Bobrick MatrixSeries™ accessories in the washroom. Radius on corners, edges, and top of door shall complement other Bobrick MatrixSeries™ s washroom accessories. Door shall be secured to mounting plate with two keyed pivots and a concealed locking device keyed like other Bobrick washroom accessories. Unit shall be equipped with a one-piece, dual toilet tissue spindle. Unit shall dispense two standard-core toilet tissue rolls up to 5-3/4" (145mm) diameter (2000 sheets). Extra roll shall be manually lowered into place when bottom roll is depleted. Replacement part numbers shall be molded into unit. Manufacturer's service and parts manual shall be provided to the building owner/manager upon request.

Surface-Mounted Multi-Roll Toilet Tissue Dispenser shall be Model B-5288 of Bobrick Washroom Equipment, Inc., Clifton Park, New York; Jackson, Tennessee; Los Angeles, California; Bobrick Washroom Equipment Company, Scarborough, Ontario; Bobrick Washroom Equipment Pty. Ltd., Australia; and Bobrick Washroom Equipment Limited, United Kingdom.

The illustrations and descriptions herein are applicable to production as of the date of this Technical Data Sheet.
The manufacturer reserves the right to, and does from time to time, make changes and improvements in designs and dimensions.

Revised 5/06 Printed in U.S.A.
© 2006 by Bobrick Washroom Equipment, Inc.