BOBRICK

Technical Data

GLASS MIRROR WITH STAINLESS STEEL ANGLE FRAME

B-290 SERIES

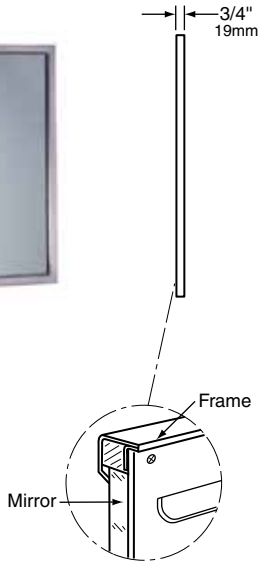

SNAP LOCKING DESIGN (Rear View)

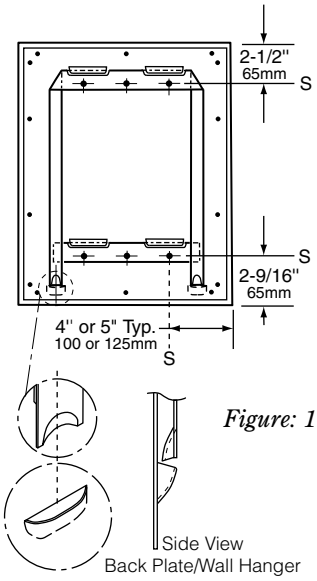

Figure: 1

SCREW LOCKING DESIGN (Rear View)

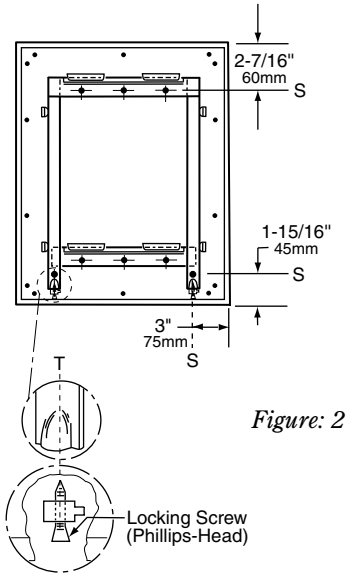

Figure: 2

STANDARD B-290 SERIES MIRRORS

MODEL NO.	OVERALL SIZE W	H
B-290 1830	18" (46cm)	30" (76cm)
B-290 1836	18" (46cm)	36" (91cm)
B-290 2430	24" (61cm)	30" (76cm)
B-290 2436	24" (61cm)	36" (91cm)
B-290 2448	24" (61cm)	48" (122cm)
B-290 2460	24" (61cm)	60" (152cm)
B-290 2472	24" (61cm)	72" (183cm)

All Other Size Mirrors

Designer's Notes:

1. Special-order sizes available on request.
2. Maximum size one-piece angle-frame mirror, 144" x 72" (366 x 183cm); minimum size, 12" x 12" (30 x 30cm). Maximum frame size available, 180" x 72" (457 x 183cm) with two pieces of glass in one-piece frame. Stainless steel I-section with polished finish covers seam where two pieces of glass butt together.
3. All Bobrick framed mirrors are manufactured to overall width and height dimensions. EXAMPLE: A 24" x 36" (61 x 91cm) mirror will be furnished 24" x 36" (61 x 91cm) outside-of-frame to outside-of-frame.
4. To specify special sizes use Series Number followed by width then height in inches. EXAMPLE: B-290 2024.
5. Bobrick framed mirrors are manufactured to a tolerance ± 1/8" (3.2mm).
6. For sufficient space to lift mirror onto wall hanger(s), provide 3-1/4" (85mm) minimum clearance above center line of mounting screw holes.
7. Provide 1" (25mm) minimum clearance at bottom of mirror for engaging locking screws and 1" (25mm) clearance on each side.

MATERIALS:

Frame — 18-8 S, type 304, heavy-gauge stainless steel, 3/4" x 3/4" (19 x 19mm) angle with vertical-grain satin finish. One-piece, roll-formed construction forms continuous integral stiffener on all sides. Bevel design on front of angle holds frame tightly against mirror. Corners of mirror frame are heliarc welded, ground and polish smooth. Galvanized steel back is fastened to frame with concealed screws and equipped with integral horizontal hanging brackets near the top and bottom of the mirror for hanging the mirror and to prevent the mirror from pulling away from the wall. Locking devices secure mirror to concealed wall hanger. In Screw Locking Design (see figure 2), concealed Philips-head locking screws securely fasten mirror to wall hanger.

Designer's Note: Type 304 stainless steel provides superior corrosion resistance, compared to 400 Series stainless steel, against environmental moisture, hose-down maintenance and strong cleaning solution.

continued . . .

The illustrations and descriptions herein are applicable to production as of the date of this Technical Data Sheet.
The manufacturer reserves the right to, and does from time to time, make changes and improvements in designs and dimensions.

Rev. 7/30/10 R/B Printed in U.S.A.

© 2010 by Bobrick Washroom Equipment, Inc.

Mirror — No. 1 quality, 1/4" (6mm) select float glass (standard glass): selected for silvering, electrolytically copper-plated by the galvanic process, and guaranteed for 15 years against silver spoilage. All edges protected by plastic filler strips; back is protected by full-size, shock-absorbing, water-resistant, nonabrasive, 3/16" (5mm) thick polyethylene padding.

Concealed Wall Hanger — 20-gauge (0.9mm) galvanized steel. Incorporates lower support member, forming rigid rectangle, which engages lower backplate louvers to keep bottom of mirror against wall.

INSTALLATION:

Mount wall hanger on wall with screws (not furnished) at points indicated by an *S*. For plaster or dry wall construction, provide backing to comply with local building codes, then secure wall hanger with screws (not furnished). When providing a concealed backing, allow backing to cover range of mounting hole locations shown on drawing. For other wall surfaces, provide fiber plugs or expansion shields for use with screws (not furnished), or provide 1/8" (3mm) toggle bolts or expansion bolts. Hang mirror on wall hanger with all four backplate louvers engaged behind horizontal wall hanger members. To do this, mirror must be centered in front of the wall hanger horizontally, pressed flat against the wall approximately 1" (25mm) above final position and then lowered into final position.

Snap Locking Design — Locking devices automatically secure mirror to concealed wall hanger when it is lowered into final position. Locking devices may be unlocked by inserting two flat blade screwdrivers behind each side of mirror near the bottom or under the bottom of the mirror and pulling mirror bottom forward and then up (see figure 3).

Screw locking Design — Lock mirror to wall hanger by tightening Phillips-head locking screws that are concealed in the bottom of frame at points indicated by a *T*. Mirror may be unlocked from wall hanger by loosening locking screws and lifting mirror off of concealed wall hanger (see figure 4).

SNAP LOCKING DESIGN

(Front View)

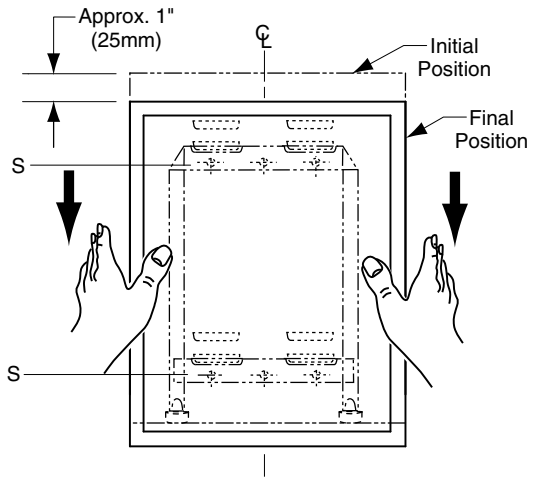

Figure: 3

SCREW LOCKING DESIGN

(Front View)

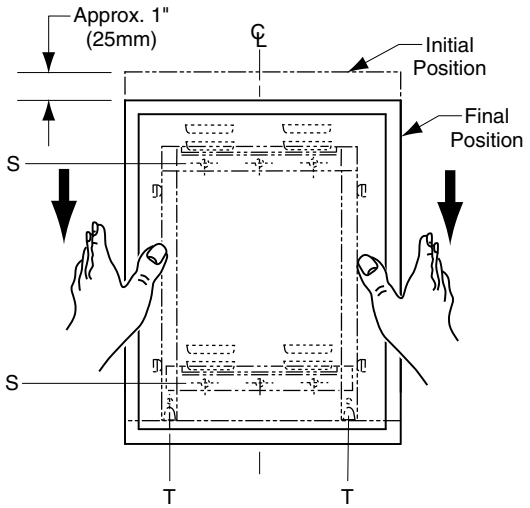

Figure: 4

SPECIFICATION:

Mirror shall have a one-piece, type 304 stainless steel angle frame, 3/4" x 3/4" (19 x 19mm) with continuous integral stiffener on all sides and beveled front to hold frame tightly against mirror; corners shall be heliarc welded, ground, and polished smooth; all exposed surfaces shall have satin finish with vertical grain. Reflective surfaces shall be guaranteed for 15 years against silver spoilage. All edges shall be protected by plastic filler strips and the back shall be protected by full-size, shock-absorbing, water-resistant, nonabrasive, 3/16" (5mm) thick polyethylene padding. Galvanized steel back shall have integral horizontal hanging brackets located at top and bottom for mounting on concealed rectangular wall hanger and to prevent the mirror from pulling away from the wall. Locking devices secure mirror to concealed wall hanger. Mirror shall be removable from wall hanger for reglazing mirror.

Framed Mirror shall be Model B-290 _____ (insert width and height) of Bobrick Washroom Equipment, Inc., Clifton Park, New York; Jackson, Tennessee; Los Angeles, California; Bobrick Washroom Equipment Company, Scarborough, Ontario; Bobrick Washroom Equipment Pty. Ltd., Australia; and Bobrick Washroom Equipment Limited, United Kingdom.

The illustrations and descriptions herein are applicable to production as of the date of this Technical Data Sheet.
The manufacturer reserves the right to, and does from time to time, make changes and improvements in designs and dimensions.

© 2010 by Bobrick Washroom Equipment, Inc.