Anets GoldenFry™ Portable Filter System

FFM80/FFM150

Item No.

Extend Your Shortening Life With the New Portable Filter System from Anets

Increase the life of your shortening and flavor of your food by filtering often. This easy to store mobile filter unit removes crumbs and sediment that cause flavor transfer and faster shortening breakdown. The compact system is simple to disassemble using quick disconnects making it very easy to clean. Changing filter envelopes is a snap with the unique and simple Anets design. Serve a great tasting product and save money and time with the Anets Portable Filter System.

STANDARD FEATURES

- New Anets filter screen eliminates clogging utilizing a special envelope style filter paper
- Pump draws from the bottom and top of the filter screen leaving virtually no shortening residue
- Low profile design fits under most fryer drains
- Easy quick disconnect assembly
- Stainless steel filter tank equipped with handles and a separate cover, remove completely from the system for thorough cleaning
- Handle folds down for compact storage
- Unit stores conveniently under the Anets BFF18X26 Bakery Fryer (FFM80) and BFF24X24 (FFM150)
- On/Off switch located away from shortening connections

FFM80 Shown

Shown completely disassembled

ANETS GoldenFRY™

NSF

c UL us

Anetsberger Brothers, Inc. ▪ *Foodservice Equipment That Turns Food Into Gold*
180 North Anets Drive ▪ Northbrook, Illinois 60062
1-800-837-2638 ▪ Fax 847-272-1943 ▪ www.anetsberger.com

Anets GoldenFry™ Portable Filter System

FFM80/FFM150

ANETS GoldenFRY™

SPECIFICATIONS

Model	FFM80 FFM150
Certification	NSF, UL, CUL
Electrical Requirements	120V, 1 Phase, 8 Amps 6′ cord and plug included
Motor	1/3 HP
Pump Speed	5 Gallons per minute
Shortening Capacity	FFM80 - 80 lbs. FFM150 - 150 lbs.
Casters	2″
Filter Tank	Stainless steel
Approx. Shipping wt.	FFM80, 145 lbs FFM150, 150 lbs

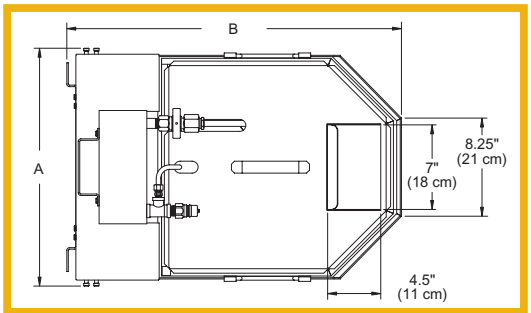

Top View

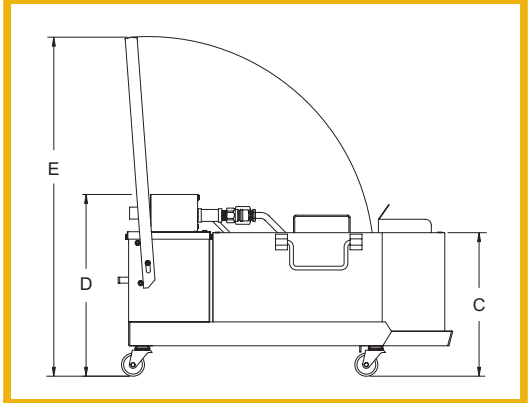

Side View

STANDARD ACCESSORIES

- 100 Envelope Filter papers
- Hose assembly for shortening disposal

OPTIONS AND ACCESSORIES

- Cleaning brush
- Envelope Filter paper

	FFM80	FFM150
A	20″ (51cm)	24″ (61cm)
B	28″ (71cm)	32.5″ (83cm)
C	12″ (30cm)	13″ (33cm)
D	15.25″ (39cm)	16.25″ (41cm)
E	28.5″ (71cm)	31.75″ (81cm)

Specifications subject to change without notice.
SS#230 Revised 9/03
Printed in the U.S.A.

ANETS

Anetsberger Brothers, Inc. ▪ *Foodservice Equipment That Turns Food Into Gold*
180 North Anets Drive ▪ Northbrook, Illinois 60062
1-800-837-2638 ▪ Fax 847-272-1943 ▪ www.anetsberger.com