ORGANIZERS
COUNTERTOP ORGANIZERS

Models CO-4 CO-7, PPO-3 PPO-5

Date: Project: Quantity: Item Number:

CO-4 85120 **CO-7 85130**

PPO-3 85090

PPO-5 85140

Bid Description

Designed with Euro styling, Server countertop organizers have rounded corners and are constructed with brushed finish (#4) stainless steel and black ABS plastic.

Countertop organizers CO-4 and CO-7 have a slanted design for easier viewing and access to product in the back. Each open style unit is divided with bins approximately 3" (7.6 cm) deep. CO-4 has (4) rectangular bins of equal size. CO-7 has (5) rectangular bins of equal size and (2) vertical bins large enough to store straws up to 8" (20.3 cm) long.

Portion Pack Organizer, PPO-3 and PPO-5 are top loading and channel portion packs forward to replenish supply. ABS plastic dividers separate unit into equal compartments.

Standard Features

Euro style with stainless steel and black plastic construction

Brushed finish stainless steel reduces visibility of fingerprints

Slanted, open style models organize & allow for easy access

PPO-3 & PPO-5 channel portion packs forward replenishing supply

PPO-3 & PPO-5 are top loading for quick refills

Warranty

Server Products equipment is backed by a two-year limited warranty against defects in materials and workmanship. For a copy of our complete warranty statement, see our website or contact us.

Specifications on reverse side

ORGANIZERS
COUNTERTOP ORGANIZERS

Models CO-4
CO-7, CO-M
PPO-5

Countertop Organizers

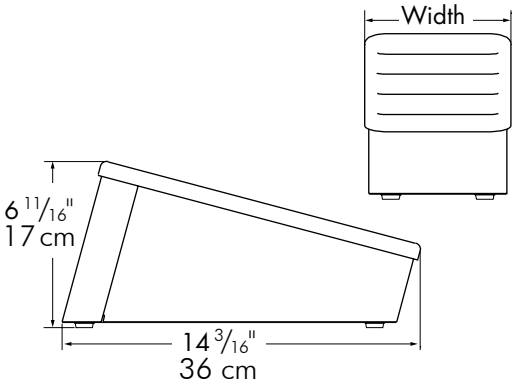

Portion Pack Organizers

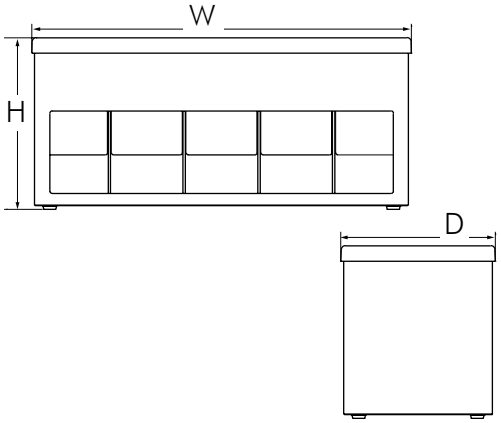

Specifications

Construction		Stainless steel with a brushed (#4) finish and black ABS plastic.			
Models		**CO-4 85120**	**CO-7 85130**	**PPO-3 85090**	**PPO-5 85140**
Height	in	6 11/16	6 11/16	9 3/8	9 3/8
	cm	17	17	23.8	23.8
Width	in	5 3/4	10 7/8	12 5/16	20 5/16
	cm	14.6	27.6	31.3	51.6
Depth	in	14 3/16	14 3/16	8 5/16	8 5/16
	cm	36	36	21.1	21.1
Weight		5 lb	7 lb	7 lb	12 lb
		2.3 kg	3.2 kg	3.2 kg	5.4 kg

FOB Richfield, Wisconsin 53076

CAD Library

Individual CAD images can be downloaded from product pages on our website. We are also a member of The KCL CADalog with more than 100 other manufacturers. Our complete collection of CAD files can be purchased through Kochman Consultants, Ltd. at kclcad.com.

Server Products, Inc. • P.O. Box 98 • Richfield, WI 53076 • Toll Free: 800-558-8722
P: 262-628-5600 • F: 262-628-5110 • spsales@server-products.com • server-products.com
Server Products, Inc. reserves the right to modify specifications without obligation. Printed in USA
1-2011 Stock #02070