Project: _____
Location: _____
Item #: _____
Quantity: _____

Reach-In Blast Chiller

VBC MODELS — VBC-100

Blast Chill/Storage Refrigerator

VBC-100

The Victory Blast Chiller is designed to reduce the temperature of 2" thick, uncovered food from 160°F to 38°F in approximately 90 minutes.

Cabinet

The cabinet front, sides, door and work surface are constructed of heavy gauge polished stainless steel to maintain an attractive appearance after years of heavy use. Three inches of environmentally friendly ODP Zero Polyurethane foam injected insulation throughout the cabinet ensures the ultimate in energy efficiency.

Doors

The self-closing door is securely mounted on a hinge, which has a lifetime guarantee. The door has an easy-to-replace magnetic balloon gasket to prevent the cold air form escaping. Door heater is standard to prevent condensation from forming on the cabinet front. The interior door liner is constructed of heavy gauge stainless steel.

Control Panel

Unique E-Z Blast™ 1-2-3 microprocessor control panel initiates blast cycles in three simple steps. Model features built-in alarms and can control the chilling process with the temperature probes or a digital timer, which can be programmed with two preset chilling times for specific food products. The controller supports a la carte style blast chilling.

The cabinet automatically defrosts and reverts to a +38°F storage mode after the blast chill cycle.

HACCP Data Logger System records, stores and prints temperature data for up to 7 days in accordance with HACCP guidelines. Its built-in thermal printer provides simplified documentation and HACCP record keeping.

Model may be used with an optional NAFEM Data Protocol compliant documentation software for HACCP monitoring. Program transfers data between the kitchen and a remote Windows® compatible computer system. This program is available from the factory and many third-party suppliers.

Standard Features

- Two Operational Functions:
  - Blast Chill Processing Refrigerator
  - +38°F Storage Refrigerator
- E-Z Blast™ Microprocessor Control Panel:
  - Blast Chill Cycle Controlled Automatically by Either a Food Probe or Digital Timer
    - Two (2) Preset Chill Times: 90, 240 Minutes
    - Soft Chill and Hard Chill Options
    - Three (3) Food Probes with Digital Temperature Indication
  - Cabinet Temperature Digital Display
  - Food Temperature Digital Display
  - Defrost Mode Indicator
  - On/Off, Blast Chill Cycle and Cancel Buttons
  - Diagnostic Trouble Shooting Capability
    - High and Low Temperature Alarm
    - Power and Component Failure Alarms
- HACCP Data Logger System Records, Stores and Prints Temperature Data up to 7 Days
  - After Termination of Chill Mode
  - After Cancellation of Chill Mode
  - Daily at Midnight
  - Seven (7) Day History on Demand
  - Built-In Thermal Printer
- Front Breathing Design for Zero Clearance Installation
- Stainless Steel Top, Front, Sides, Door Interior and Work Surface
- Flush Mounted Doors, Anti-Condensation Heaters and Removable Magnetic Door Gaskets
- Twelve (12) Adjustable White Resin Coated Wire Shelves
- Complies with FDA, NSF 7 and HACCP Guidelines
- Heavy Duty Swivel Casters with Brakes on Front
- No Drain Required
- Large Surface Area Evaporator and High Velocity Fan Contained in Separate Compartment
- Defrost on Demand and Automatic Defrost
- Environmentally Friendly R-404a Refrigerant
- 3"of Environmentally Friendly ODP Zero Polyurethane Foam Injected Insulation

Optional Features and Accessories

- HACCP Monitoring Program
- Factory Installed Reverse Door Hinging
- 6" Legs in Place of Standard Casters
- Extra Printer Paper

Approvals:

SANITATION LISTED REFRIGERATORS AND STORAGE FREEZERS — CONFORMS TO NSF STD 7

ETL LISTED COMMERCIAL REFRIGERATORS AND FREEZERS — CONFORMS TO UL STD 471

Victory Refrigeration specification sheets are available online at www.victoryrefrigeration.com.

Victory Refrigeration, Inc. I 110 Woodcrest Road I Cherry Hill, NJ 08003 USA I Phone: 856.428.4200 I Fax: 856.428.7299 I E-mail: sales@victory-refrig.com

CHARACTERISTICS	VBC-100
Capacity (lbs./90 mins.)	100lbs.
Width, Overall	43.375”
Depth, Overall	40.625”
Depth, Door Open 90º	66”
Height (incl. casters)	80”
Clear Door Width	21.375”
Clear Door Height	51.375”
No. of Shelves	12
Cabinet Voltage (*not to exceed)	208-230/60/3
Feed Wires (*Hardwired)	3
Total Amperes	8.6

Crated Dimensions	Height	Width	Depth	Weight
VBC-100	84”	46.5”	43.5”	659lbs.

Refrigeration Data

	Refrigerant	Compressor	BTUH*
VBC-100	R-404A	2 H.P.	12098

*BTUH @ 90°F. Ambient, +5°F. Evaporator

Dimensional tolerance ± .25” Metric dimensions (mm)

NOTE: If cabinet is located directly against wall an all around clearance of 2” is required, and a minimum clearance of 10” under ceiling.

We reserve the right to change specifications and product design without notice. Such revisions do not entitle the buyer to corresponding changes, improvements, additions or replacements for previously purchased equipment.

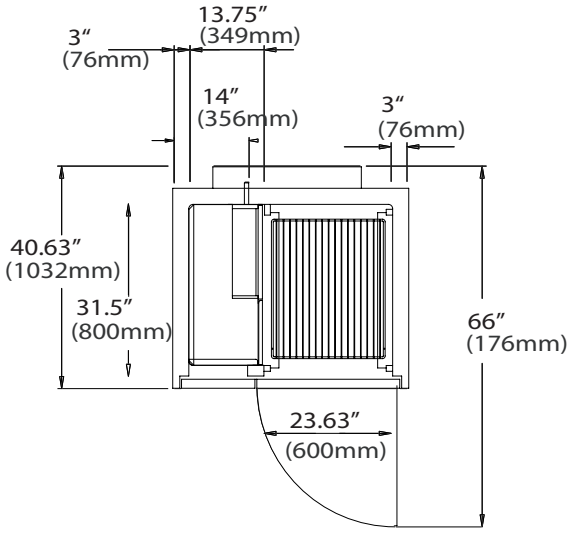

TOP VIEW

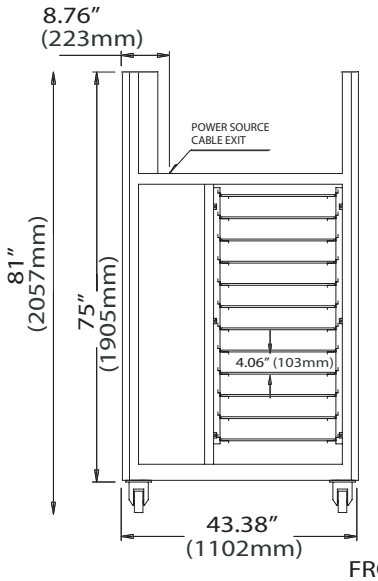

FRONT VIEW

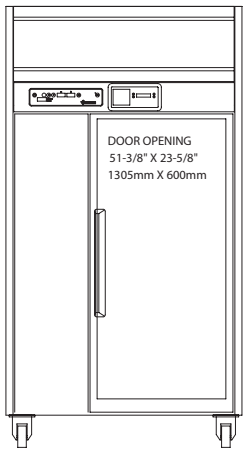

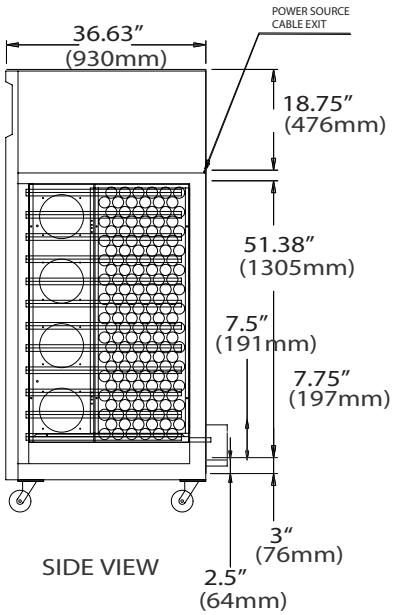

SIDE VIEW

Continuous product development may necessitate specification changes and design without notice.

Victory participates in the KCL CADalog, the most current source of CAD symbols for foodservice designers worldwide. Symbols include standard equipment in plan, side, front and 3-D views, layered for FEDA/FCSI recommended guidelines.

Copyright June 2009
Printed in U.S.A. 063009