Project: _____
Location: _____
Item #: _____
Quantity: _____

Shallow Depth Refrigerators

RS MODELS —
Stainless Steel
Exterior and Interior.

RS-1N-S7
RS-2N-S7

Half Door and Remote Models Available

RS-2N-S7 Illustrated

Cabinet:
The cabinet front and doors are constructed of heavy gauge polished stainless steel to maintain an attractive appearance for years of heavy use. Foamed-in-place polyurethane insulation throughout the cabinet and doors ensures the ultimate in energy efficiency.

Doors:
The self-closing doors are securely mounted on rugged cam-lift hinges which have a lifetime guarantee. Each door has a heavy-duty cylinder lock and self-adjusting magnetic gasket to prevent the cold air from escaping. Humidity control wires located around the door jamb prevent condensation from forming on the cabinet front and are concealed by a high impact, non-conductive thermal breaker strip. The interior door liner is constructed of durable ABS material which resists denting and scratching and is easy to clean. Each safety grip handle is guaranteed for life. Interior lighting is controlled automatically by a switch mounted in the hinge.

Shelving:
The heavy-duty wire shelves are adjustable in one inch increments. A wide door opening allows the use of a variety of optional pan slide types for 12” x 20” and 14” x 18” pans and trays.

Refrigeration System:
The self-contained refrigeration system is mounted on top of the cabinet. The air circulating fans and the forced convection cooling coil are contained in an insulated housing separate from the product zone allowing for maximum food storage capacity. All condensate water is disposed of automatically by the energy efficient non-electric condensate evaporator, no plumbing is required.

Standard Features
- Digital Thermometer/Battery Back-up
- Energy Saver Switch
- Stainless Steel Case Front, Door(s) and Sides
- Heavy-Duty Lifetime Cam Lift Hinges
- Adjustable Wire Shelves
- Adjustable Stainless Steel Legs
- Lifetime Safety Grip Handle(s)
- Self-Closing Doors
- Flush Mounted Automatic Interior Lighting
- Energy Saving Thermal Breaker Strips
- Door Opening Accepts 12” x 20” and 14” x 18” Pans
- Heavy-Duty Cylinder Locks
- One Piece Self-Adjusting Magnetic Door Gaskets
- High Impact ABS Interior Door Liner
- Plasticized Fin Coil
- Environmentally Friendly R-134a Refrigerant
- Condensate Automatically Evaporated
- Cord and Plug Attached on 115V Models 12 Amps or Less

Optional Features and Accessories
- Dial Thermometer
- Two Half Doors in Place of One Full Length Door
- Full and Half Size Hinged Glass Doors with Cylinder Locks
- Change Door Swing
- Stainless Steel Wire Shelves
- Stainless Steel Angle Pan Slides
- Zinc Plated Wire Pan Slides
- 5” Diameter Heavy-Duty Swivel Casters with Brakes
- Stainless Steel Case Back
- Remote Models

Approvals:

Victory Refrigeration specification sheets are available online at www.victory-refrig.com.

Victory Refrigeration, Inc. I 110 Woodcrest Road I Cherry Hill, NJ 08003 USA I Phone: 856.428.4200 I Fax: 856.428.7299 I E-mail: sales@victory-refrig.com

CHARACTERISTICS	ONE SECTION Reach-In	TWO SECTION Reach-In
Width, Overall	31 1/4	58 3/8
Depth, Overall (incl. handles)	29 7/8	29 7/8
Height, Overall (incl. adj. legs)	84	84
Depth, Door(s) Open 90°	58 1/4	54
Clear Door Width	23 3/8	22 1/8
Clear Full Door Height	55 1/4	55 1/4
Clear Half Door Height	25 3/8	25 3/8
Capacity Net (cubic feet)	16.7	37.5
No. of Full Doors	1	2
No. of Half Doors	2	4
No. of Shelves	3	6
Shelf Area (sq. feet)	14.1	28.1
Cabinet Voltage	115/60/1	115/60/1
Feed Wires	2	2
Condensing Unit Voltage	115/60/1	115/60/1
Condensing Unit Size (HP)	1/3	1/3
Total Amperes	6.6	9.6

Crated dim. & wts.	Ht.	Width	Depth	Cu.Ft.	Lbs
One Section	84	36 1/2	44 3/4	82.2	410
Two Section	84	63 5/8	44 3/4	143.3	635

Approximate Pass-Thru weights, add 15%

FOR REMOTE MODELS– Substitute an "R" for the "S" in suffix. For example: Model RS-1D-**S7** (self-contained) would be RS-1D-**R7** remote cabinet. Air circulating fans, expansion valve and plasticized coil are provided. Condensing units not supplied. The following units are recommended with 1/2" O.D. Suction line, 1/4" O.D. Liquid line.

REMOTE REFRIGERATION

	Cond. Unit	BTUH	Cabinet	Amps
One Section	1/3 H.P.	2540	115/60/1	2.5
Two Section	1/3 H.P.	2540	115/60/1	3.4

For Remote Pass-Thru–Consult factory

Dimensional tolerance ± 1/4" Metric dimensions (MM)

NOTE: If cabinet is located directly against wall an all around clearance of 2" is required, and a minimum clearance of 10" under ceiling.

We reserve the right to change specifications and product design without notice. Such revisions do not entitle the buyer to corresponding changes, improvements, additions or replacements for previously purchased equipment.

REACH-IN MODELS

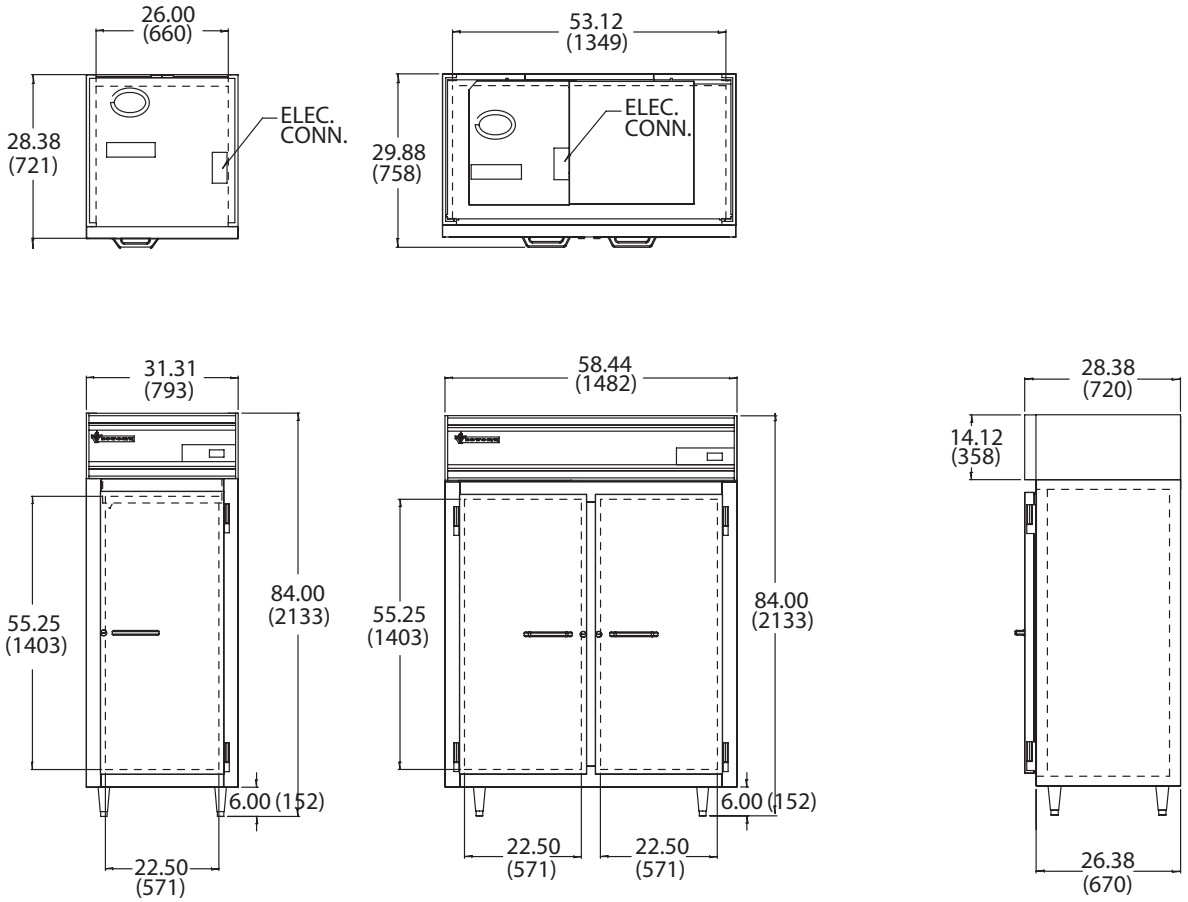

Continuous product development may necessitate specification changes and design without notice.

Victory participates in the KCL CADalog, the most current source of CAD symbols for foodservice designers worldwide. Symbols include standard equipment in plan, side, front and 3-D views, layered for FEDA/FCSI recommended guidelines.

Copyright June 2009
Printed in U.S.A. 063009