Project: _____
Location: _____
Item #: _____
Quantity: _____

Extra Wide Warming Cabinets

HS MODELS — Stainless steel exterior and interior.

HS-1D-7-EW
HS-2D-7-EW

HSA MODELS — Stainless steel exterior. Aluminum interior.

HSA-1D-7-EW
HSA-2D-7-EW

Half Door and Pass-Thru Models Available

HS-2D-S7-EW

Cabinet:

The cabinet front and doors are constructed of heavy gauge polished stainless steel to maintain an attractive appearance for years of heavy use. Foamed-in-place polyurethane insulation throughout the cabinet and doors ensures the ultimate in energy efficiency. An operational indicator panel contains a thermometer and adjustable thermostat control which is accurately calibrated from 80°F. to 180°F.

Doors:

The self-closing doors are securely mounted on rugged cam-lift hinges, which have a lifetime guarantee. Each door has a heavy-duty cylinder lock and self-adjusting magnetic gasket. The full perimeter of the door opening has a stainless steel door jamb. The interior door liner is constructed of heavy gauge stainless steel. Each safety grip handle is guaranteed for life.

Shelving:

The heavy-duty wire shelves are adjustable in one-inch increments. A wide door opening allows the use of a variety of optional pan slide types for 12”x20”, 18”x26”, and 14”x18” pans and trays.

Heating System:

Strip type 750-watt heating elements, operating on 208-240/60/1, having a total of 1500 watts per compartment. An externally mounted blower system maintains even temperature through out the food zone area. Manually controlled humidity vents are provided in the top of the cabinet.

Standard Features (all models)

- Digital Thermometer/Battery Back-up
- Adjustable Stainless Steel Legs
- Adjustable Thermostat
- Stainless Steel Case Front, Door(s) and Sides
- Lifetime Heavy-Duty Cam Lift Hinges
- Adjustable Wire Shelves
- Lifetime Safety Grip Handle(s)
- Self-Closing Doors with Safety Stops
- Door Opening Accepts 12” x 20” and 18” x 26” Pans
- Heavy-Duty Cylinder Locks
- Humidity Vent(s) Manually Operated
- One Piece Self-Adjusting Magnetic Door Gaskets
- Stainless Steel Door Liner

Optional Features and Accessories

- Dial Thermometer
- Two Half Doors in Place of One Full Length Door
- Full and Half Size Hinged Glass Doors with Cylinder Locks
- Change Door Swing
- Adjustable Stainless Steel Wire Shelves
- Stainless Steel Angle Pan Slides
- Zinc Plated Wire Pan Slides
- 5” Diameter Heavy-Duty Swivel Casters with Brakes
- Stainless Steel Case Back
- Flush Mounted Interior Lighting

Approvals:

Victory Refrigeration specification sheets are available online at www.victory-refrig.com.

Victory Refrigeration, Inc. I 110 Woodcrest Road I Cherry Hill, NJ 08003 USA I Phone: 856.428.4200 I Fax: 856.428.7299 I E-mail: sales@victory-refrig.com

CHARACTERISTICS	ONE SECTION		TWO SECTION	
	Reach-In	Pass-Thru	Reach-In	Pass-Thru
Width, Overall	31 1/4	31 1/4	58 3/8	58 3/8
Depth, Overall (incl. handles)	35 7/8	39 3/8	35 7/8	39 3/8
Height, Overall (incl. adj. legs)	84	84	84	84
Depth, Doors Open 90º	60	87 5/8	60	87 5/8
Depth, Case Over Ramps	22 1/2	22 1/2	22 1/2	22 1/2
Clear Door Width	55 1/4	55 1/4	55 1/4	55 1/4
Clear Full Door Height	25 3/8	25 3/8	25 3/8	25 3/8
Capacity Net (cubic feet)	24.4	26.2	52.0	55.6
No. of Full Doors	1	1	2	2
No. of Half Doors	2	2	4	4
No. of Shelves	3	3	6	6
Shelf Area (square feet)	19.1	19.1	38.2	38.2
Cabinet Voltage	208-240/60/1	208-240/60/1	208-240/60/1	208-240/60/1
Max. Fuse Size T.D.	15 Amps	15 Amps	20 Amps	20 Amps
Feed Wires	2	2	2	2
Heater Watts per Section (@240V)	1500	1500	1500	1500
Total Wattage (Heaters & Fan @240V)	1500	1500	3000	3000
Total Amperes	6.3	6.3	13.0	13.0

Crated dim. & wts.	Ht.	Width	Depth	Cu.Ft.	S	SA
One Section	84	49	36	82.21	435	395
Two Section	84	63 5/8	44 3/4	143.3	700	635

Approximate Pass-Thru weights, add 15%

Dimensional tolerance ± 1/4" Metric dimensions (MM)

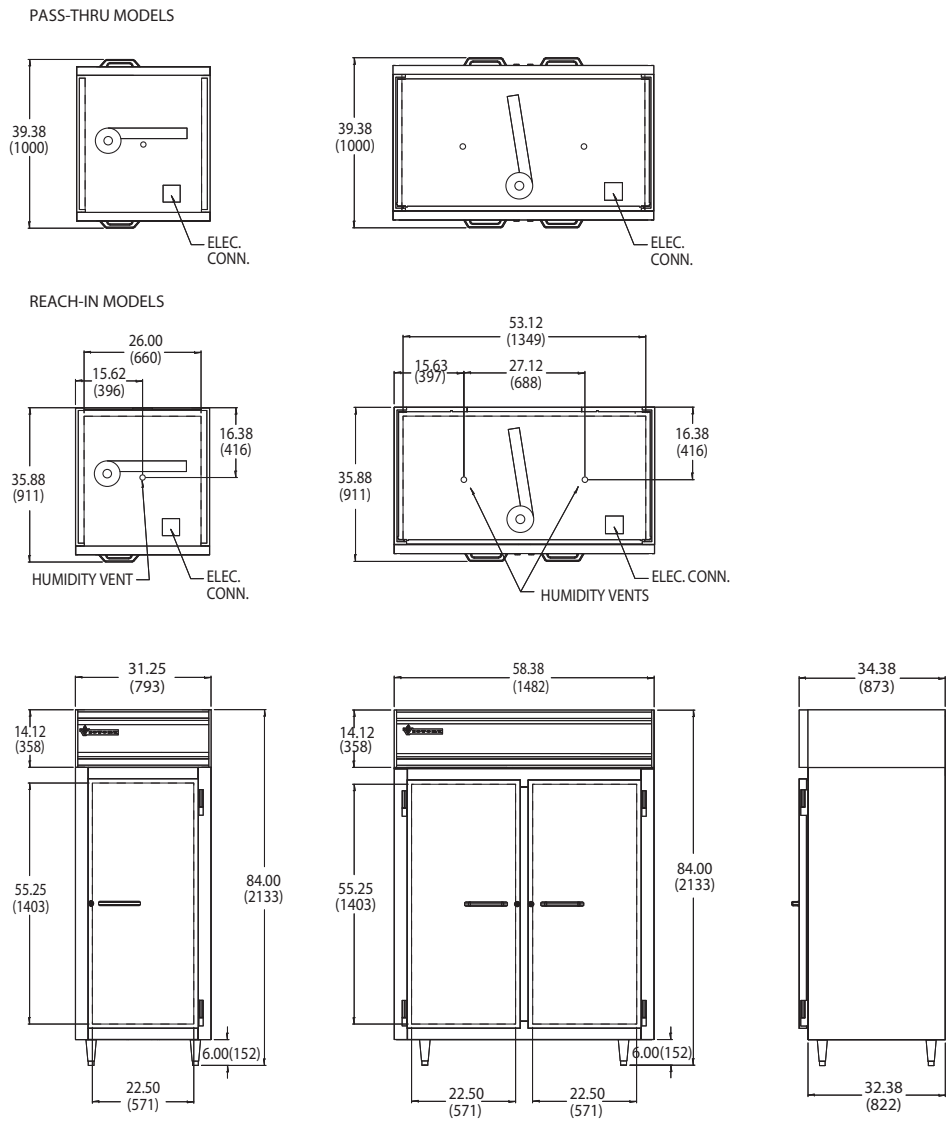

NOTE: If cabinet is located directly against wall an all around clearance of 2" is required, and a minimum clearance of 10" under ceiling.

We reserve the right to change specifications and product design without notice. Such revisions do not entitle the buyer to corresponding changes, improvements, additions or replacements for previously purchased equipment.

Continuous product development may necessitate specification changes and design without notice.

Victory participates in the KCL CADalog, the most current source of CAD symbols for foodservice designers worldwide. Symbols include standard equipment in plan, side, front and 3-D views, layered for FEDA/FCSI recommended guidelines.

Copyright June 2009
Printed in U.S.A. 063009