Project: _____
Location: _____
Item #: _____
Quantity: _____

Roll-in Refrigerators

RIS MODELS — Stainless steel exterior and interior.
RIS-1D-S7
RIS-2D-S7
RIS-3D-S7

RISA MODELS — Stainless steel exterior. Aluminum interior.
RISA-1D-S7
RISA-2D-S7
RISA-3D-S7

RIA MODELS — Stainless steel fronts and doors. Aluminum sides and interior.
RIA-1D-S7
RIA-2D-S7
RIA-3D-S7

Half Door, Roll-Thru and Remote Models Available

RIS-2D-S7

Cabinet:
Each Victory cabinet is internally supported, braced and assembled into a single rigid unit. The cabinet front and doors are constructed of heavy gauge polished stainless steel to maintain an attractive appearance after years of heavy use. Foamed-in-place polyurethane insulation throughout the cabinet and doors ensures the ultimate in energy efficiency.

Doors:
The self-closing doors are securely mounted on rugged cam-lift hinges, which have a lifetime guarantee. Each door has a heavy-duty cylinder lock and self-adjusting magnetic gasket to prevent the cold air from escaping. Humidity control wires located around the door jamb prevent condensation from forming on the cabinet front and are concealed by a high impact, non-conductive thermal breaker strip. The interior door liner is constructed of durable ABS material, which resists denting and scratching and is easy to clean. Each safety grip handle is guaranteed for life. Removable ramps are provided on the bottom of each door opening.

Refrigeration System:
All components of the self-contained refrigeration system are mounted on top of the cabinet. The air circulating fans and the forced convection-cooling coil are contained in an insulated housing separate from the product zone allowing for maximum food storage capacity. All condensate water is disposed of automatically by the energy efficient non-electric condensate evaporator, no plumbing is required.

RIS and RISA Models
- Digital Thermometer/Battery Back-up

RIA Models
- Dial Thermometer

Standard Features (all models)
- Energy Saver Switch
- Stainless Steel Case Front and Door(s)
- Lifetime Heavy-Duty Lifetime Cam Lift Hinges
- Lifetime Safety Grip Handle(s)
- Self-Closing Doors with Safety Stops
- Adjustable Wiper Gasket(s)
- Removable Ramps(s)
- Energy Saving Thermal Breaker Strips
- Door Opening Accepts Carts up to 27”w x 29”d x 64”h
- Heavy-Duty Cylinder Locks
- One Piece Self-Adjusting Magnetic Door Gaskets
- High Impact ABS Interior Door Liner
- Plasticized Fin Coil
- Environmentally Friendly R-134a Refrigerant
- Non-Electric Condensate Evaporator
- Stainless Steel Floor
- Cord and Plug Attached on 115V Models 12 Amps or Less

Optional Features and Accessories
- Dial or Digital Thermometer
- Hinged Glass Doors with Cylinder Locks
- Change Door Swing
- Shelf Pilaster Strips
- Adjustable Stainless Steel Wire Shelves
- Stainless Steel Angle Pan Slides
- Zinc Plated Wire Pan Slides
- Stainless Steel Case Back
- Remote and Roll-Thru Models

Approvals:

Victory Refrigeration specification sheets are available online at www.victory-refrig.com.

Victory Refrigeration, Inc. I 110 Woodcrest Road I Cherry Hill, NJ 08003 USA I Phone: 856.428.4200 I Fax: 856.428.7299 I E-mail: sales@victory-refrig.com

CHARACTERISTICS	ONE SECTION		TWO SECTION		THREE SECTION	
	Roll-In	Roll-Thru	Roll-In	Roll-Thru	Roll-In	Roll-Thru
Width, Overall	36 1/2	36 1/2	68 7/8	68 7/8	101 1/4	77 3/4
Depth, Overall (incl. handles)	35 7/8	39 3/8	35 7/8	39 3/8	35 7/8	39 3/8
Height, Overall	84	84	84	84	84	84
Depth, Door(s) Open 90º	65 1/4	98 1/8	65 1/4	98 1/8	65 1/4	84 5/8
Depth Case Over Ramp	35 1/2	38 1/2	35 1/2	38 1/2	35 1/2	38 1/2
Clear Door Width	27 3/4	27 3/4	27 3/4	27 3/4	27 3/4	27 3/4
Clear Full Door Height	65 1/4	65 1/4	65 1/4	65 1/4	65 1/4	55 1/4
Capacity Net (cubic feet)	33.6	36.2	67.2	72.4	100.9	75.9
No. of Full Doors	1	2	2	4	3	6
Cabinet Voltage	115/60/1	115/60/1	115/60/1	115/60/1	115/60/1	115/60/1
Feed Wires	2	2	2	2	3	3
Condensing Unit Voltage	115/60/1	115/60/1	115/60/1	115/60/1	208-230/60/1	208-230/60/1
Condensing Unit Size (HP)	1/3	1/2	1/2	1/2	3/4	3/4
Total Amperes	9.2	12.0	11.9	12.6	10.6	12.1

Crated dim. & wts.	Ht.	Width	Depth	Cu.Ft.	Lbs
One Section	87	41 3/4	44 3/4	94.1	450
Two Section	87	74 5/8	44 3/4	168.1	750
Three Section	87	107	44 3/4	241.1	1140

Approximate Roll-Thru weights, add 15%

FOR REMOTE MODELS– Substitute an "R" for the "S" in suffix. For example: Model RIS-1D-**S7** (self-contained) would be RIS-1D-**R7** remote cabinet. Air circulating fans, expansion valve and plasticized coil are provided. Condensing units not supplied. The following units are recommended with 1/2" O.D. Suction line, 1/4" O.D. Liquid line.

REMOTE REFRIGERATION

	Cond. Unit	BTUH	Cabinet	Amps
One Section	1/3 H.P.	2540	115/60/1	2.2
Two Section	1/2 H.P.	4400	115/60/1	3.0
Three Section	3/4 H.P.	5800	115/60/1	4.3

For Remote Roll-Thru–Consult factory

Dimensional tolerance ± 1/4" Metric dimensions (MM)

NOTE: If cabinet is located directly against wall an all around clearance of 2" is required, and a minimum clearance of 10" under ceiling.

We reserve the right to change specifications and product design without notice. Such revisions do not entitle the buyer to corresponding changes, improvements, additions or replacements for previously purchased equipment.

ROLL-THRU MODELS

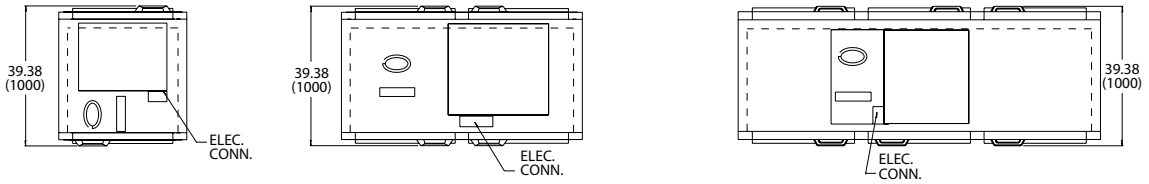

ROLL-IN MODELS

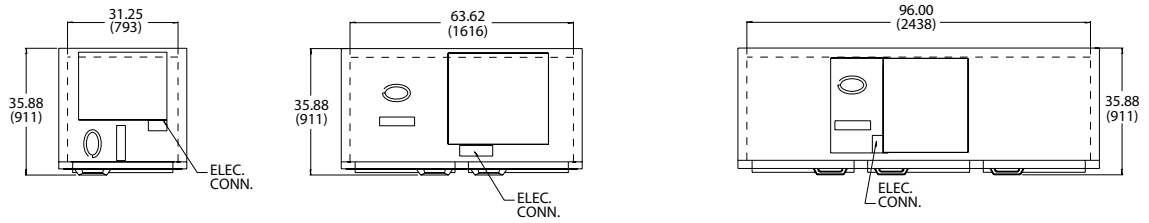

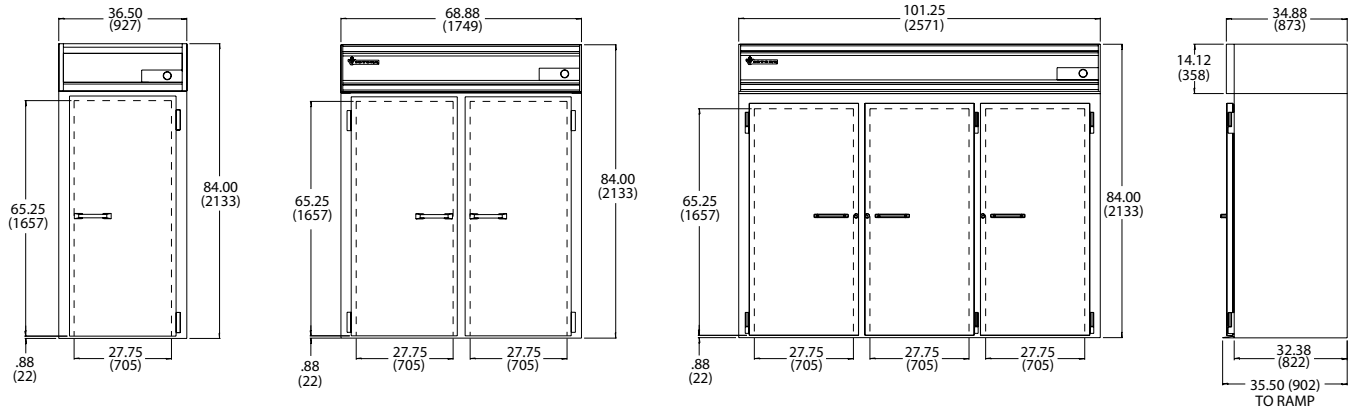

Continuous product development may necessitate specification changes and design without notice.

Victory participates in the KCL CADalog, the most current source of CAD symbols for foodservice designers worldwide. Symbols include standard equipment in plan, side, front and 3-D views, layered for FEDA/FCSI recommended guidelines.

Copyright June 2009
Printed in U.S.A. 063009