Project: _____
Location: _____
Item #: _____
Quantity: _____

Undercounter Freezer with Stainless Steel Top and Backsplash

One Section Model with Door **UF-27-SBS**
Case front, doors, top and ends of stainless steel. One piece ABS interior liner with stainless steel coil housing.

One Section Model with Two Drawers **UFD-27-SBS**
Case front, drawers, top and ends of stainless steel. One piece ABS interior liner with stainless steel coil housing.

UF-27-SBS

UFD-27-SBS

Standard Features

- Interior Thermometer
- Easy Closing Door with One Piece Magnetic Gasket
- Door can be Rehinged in the Field
- One Piece Heavy-Duty Door Handle
- Heavy-Duty Vinyl Coated Steel Shelves
- High Density Foamed-in-Place Polyurethane Insulation
- High Impact One Piece ABS Interior Liner
- Plasticized Fin Coil
- Automatic Condensate Evaporator
- Energy Efficient Refrigeration System with Automatic Defrost
- Environmentally Friendly R-404A Refrigerant
- Cord and Plug Attached
- 3” Diameter Heavy-Duty Swivel Casters with Brakes
- Completely Enclosed Cabinet Back

Optional Features and Accessories

- Door Lock
- Change Door Swing
- Stainless Steel Back
- Adjustable Legs
- 5” Diameter Heavy-Duty Swivel Casters with Brakes
- Adjustable Stainless Steel Legs

Standard Features

- Interior Thermometer
- Each Drawer has One 12” x 20” x 6” Stainless Steel Pan (Supplied)
- Stainless Steel Drawer Front
- Heavy-Duty Stainless Steel Slides and Ball Bearings
- High Density Foamed-in-Place Polyurethane Insulation
- High Impact One Piece ABS Interior Liner
- Plasticized Fin Coil
- Automatic Condensate Evaporator
- Energy Efficient Refrigeration System with Automatic Defrost
- Environmentally Friendly R-404A Refrigerant
- Cord and Plug Attached
- 3” Diameter Heavy-Duty Swivel Casters with Brakes
- Completely Enclosed Cabinet Back

Optional Features and Accessories

- Stainless Steel Back
- Adjustable Legs
- 5” Diameter Heavy-Duty Swivel Casters with Brakes
- Adjustable Stainless Steel Legs

Approvals:

Victory Refrigeration specification sheets are available online at www.victory-refrig.com.

Victory Refrigeration, Inc. I 110 Woodcrest Road I Cherry Hill, NJ 08003 USA I Phone: 856.428.4200 I Fax: 856.428.7299 I E-mail: sales@victory-refrig.com

CHARACTERISTICS	UF-27-SBS	UFD-27-SBS
Width, Overall	27	27
Depth, Overall (incl. handles)	29 3/8	29 3/8
Height, Overall (incl. casters)	38 1/2	38 1/2
Depth, Open Door 90°	55 3/8	—
Clear Door Opening, Width	23 1/2	—
Clear Full Door Opening, Height	25 3/4	—
Depth, Drawer Open	—	46 1/2
Clear Drawer Width	—	23 1/2
Capacity Net (cubic feet)	7.0	7.0
No. of Full Doors	1	—
No. of Shelves	2	—
Shelf Area (square feet)	7.2	—
Each Drawer Pan (cubic feet)	—	1.5
Cabinet Voltage	115/60/1	115/60/1
Feed Wires	2	2
Condensing Unit Voltage	115/60/1	115/60/1
Condensing Unit Size (HP)	1/3	1/3
Total Amperes	7.1	7.1

Crated dim. & wts.	Ht.	Width	Depth	Cu. Ft.	Lbs.
UF-27-SBS	42 1/2	34	33	27.6	165
UFD-27-SBS	42 1/2	34	33	27.6	165

Dimensional tolerance ± 1/4" Metric dimensions (MM)

NOTE: If cabinet is located directly against wall an all around clearance of 2" is required.

Drawings show cabinets with optional legs, but characteristics table shows dimensions with standard 3" casters.

We reserve the right to change specifications and product design without notice. Such revisions do not entitle the buyer to corresponding changes, improvements, additions or replacements for previously purchased equipment.

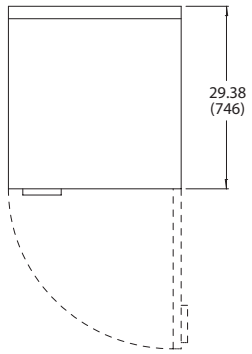

UF-27-SBS TOP VIEW

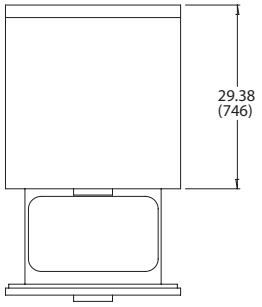

UFD-27-SBS TOP VIEW

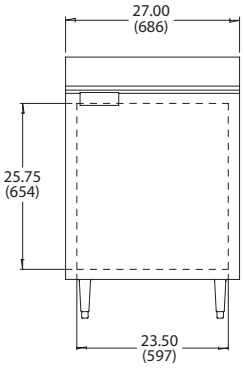

UF-27-SBS FRONT VIEW

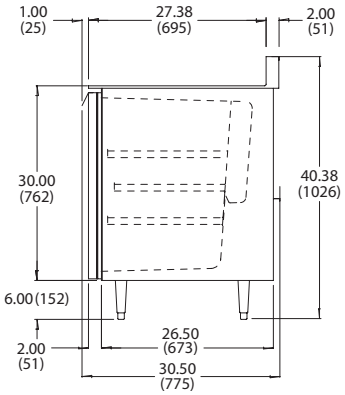

UF-27-SBS SIDE VIEW

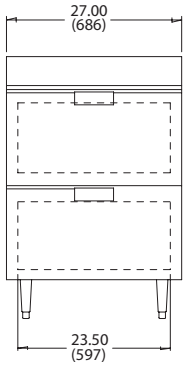

UFD-27-SBS FRONT VIEW

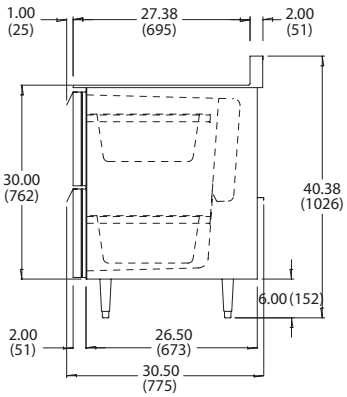

UFD-27-SBS SIDE VIEW

Continuous product development may necessitate specification changes and design without notice.

Victory participates in the KCL CADalog, the most current source of CAD symbols for foodservice designers worldwide. Symbols include standard equipment in plan, side, front and 3-D views, layered for FEDA/FCSI recommended guidelines.

Copyright June 2009
Printed in U.S.A. 063009