Amana® Commercial

Project #: _____

Item #: _____

AIA File #: _____

Specification #: _____

Model RC17S2 shown

Heavy Volume

Amana Commercial Microwave Model RC17S2

Power Output

- 1700 watts of power.
- 11 power levels for consistent, delicious results for frozen, refrigerated and fresh foods - from the freezer to table in minutes.
- Unique method of energy distribution provides superior even heating throughout the cavity.

Easy to Use

- Up to 100 programmable menu items simplifies cooking and ensures consistent results.
- Four stage cooking option with one-touch programming. Reduces prep time, labor and food waste while providing consistent results.
- Controls are user friendly and require minimal training.
- Multiple quantity pad calculates the proper cook times for up to 8 items.
- Automatic voltage sensor for easy installation.
- See-through door and lighted interior for monitoring without opening the door.
- Ample 1.0 cubic ft. (.028 m^3) capacity accommodates two standard 4" (102mm) deep half-sized pans.
- Interior ceramic shelf is sealed and recessed to reduce plate-to-shelf edge impact and keep spills contained.
- Stackable to save valuable counter space.

Easy to Maintain

- Stainless steel exterior and interior for easy cleaning and a professional look.
- Constructed to withstand the foodservice environment.
- Removable, cleanable air filter and clean filter reminder protect oven components.
- Full 3 year warranty.
- Backed by the ACP, Inc. 24/7 ComServ Support Center, 866-426-2621.
- ETL Listed.

Intertek Intertek

Heavy Volume

This category of microwave is ideal for...

Applications:

- Casual dining
- Country clubs
- Healthcare/Nurses stations

Through put potential:

- 8 oz. portions of frozen mixed vegetable, 30+ portions per hour
- 8 oz. portions of fresh asparagus, 50+ portions per hour
- 4 oz. portion of scrambled eggs, 50+ portions per hour

Defrost:

- Defrosts most frozen food products

All ACP, Inc. commercial ovens are backed by our Culinary Center. Call us with any question regarding food preparation, menu development and cooking times. 866-426-2621.

ACP INC.

225 49th Ave. Dr. SW Cedar Rapids, IA 52404 U.S.A. | 800-233-2366 | 319-368-8120 | Fax: 319-368-8198 | www.acpsolutions.com

Amana® is a Registered trademark of Maytag Corporation. Brand used under license.

Commercial Microwave Model RC17S2 | Heavy Volume

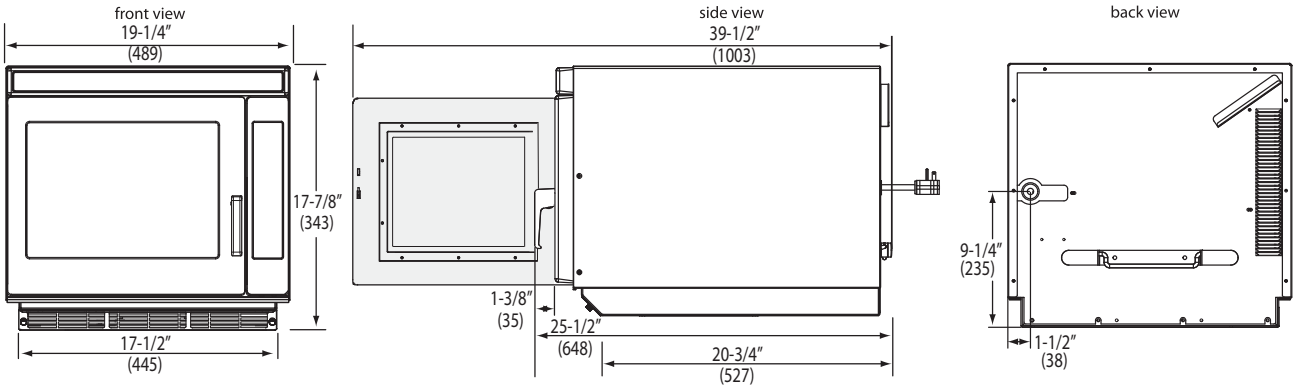

Installation Clearance: 1 1/2" (38.09) top and sides

Drawings available from KCL CADlog - techs@kclcad.com

Specification #:

AIA File #:

Specifications

Model	RC17S2	UPC Code 042159061150	
Configuration	Countertop		
Control System	Touch		
Programmable Control Pads	10		
Settings Programmable	100		
Max. Cooking Time	60:00		
Power Levels	11		
Defrost	Yes, power level 2		
Time Entry Option	Yes, 3		
Microwave Distribution	Double rotating antenna, top and bottom		
Magnetrons	2		
Display	LED		
Stackable	Yes		
Stage Cooking	Yes, 4		
Interior Light	Yes		
Door Opening	Lift and pull handle		
Signal	Adjustable, end of cycle		
Air Filter	Yes, removable, with clean filter reminder		
Call Service Alert	Yes		
Automatic Voltage Sensor	Yes		
Multiple Portion Setting	Yes, up to 8 items		
Exterior Dimensions	H 18¼" (464)	W 19¼" (489)	D** 26¼" (667)
Cavity Dimensions	H 8½" (216)	W 13" (330)	D 15" (381)
Door Depth	40" (1016 mm), 90°+ door open		
Usable Cavity Space	1.0 cubic ft. (.028m³)		
Exterior Finish	Stainless steel		
Interior Finish	Stainless steel with sealed-in ceramic shelf		
Power Consumption	2700 W, 13 A		
Power Output*	1700 W* Microwave		
Power Source	208 - 240V, 60 Hz, 20 A single phase		
Plug Configuration / Cord	NEMA 6-20	5 ft. (1.5m)	
Frequency	2450 MHz		
Product Weight	94 lbs. (43 kg.)		
Ship weight (approx.)	101 lbs. (46 Kg.)		
Shipping Carton Size	L 28¼" (718)	W 21¾" (553)	H 21½" (546)

Measurements in ( ) are millimeters
* IEC 705 Tested
** Includes handle

Specifications

Commercial microwave 10 touch pad control panel shall be programmable with the ability to program up to 100 menu items and shall have automatic cooking capability for up to eight portions. Cooking timer shall be 60 minute, countdown style with a time entry option and an adjustable end of cycle audible signal. LED display shall be a backlit. There shall be 11 power levels, 4 cooking stages and defrost mode at 20% power. Microwave output shall be 1700 watts distributed by two magnetrons each with a rotating antenna to provide superior even heating throughout the cavity. An automatic voltage sensor shall accommodate both 208 and 240 volts. Heavy duty door shall have a tempered glass window and a grab and pull handle with a 90°+ opening for easy access. An interior light shall facilitate monitoring without opening the door. The large 1.0 cubic ft. (.028 m³) cavity shall accommodate two standard 4" (102 mm) deep half-sized pans. Interior ceramic shelf shall be sealed and recessed to reduce plate-to-shelf edge impact. Oven shall have a stainless steel interior and exterior and be stackable to save counter and shelf space. Oven shall have a removable, cleanable splatter shield. Air filter shall be easily accessible and removable from the front of the oven and have a "clean filter" reminder feature. A "call service alert" shall appear on display when service is needed. Microwave oven shall comply with standards set by the U.S Department of Health and Human Services, ETL for safety and sanitation.

Intertek Intertek

Warranty

Full 3 year warranty:
All 3 years – parts, labor, and travel are covered.

Service

All products are backed by the ACP, Inc. 24/7 ComServ Support Center.

ComServ Commercial Service
866-426-2621

225 49th Ave. Dr. SW Cedar Rapids, IA 52404 U.S.A. | 800-233-2366 | 319-368-8120 | Fax: 319-368-8198 | www.acpsolutions.com

ACP commitment to quality may mean a change in specification without notice. Product of the U.S.A. © 2009 ACP Inc.™ Printed in the U.S.A.