Champion®

The Dishwashing Machine Specialists

Project _____

Item No. _____

Quantity _____

UH-170B UNDERCOUNTER

STANDARD FEATURES

- **ENERGY STAR® Qualified**
- **NEW "Shear Energy"** – a reduction in energy requirements while maximizing performance!
- **NEW "Multi-Power"** – includes **"Multi-Volt"** and **"Multi-Phase".** Allows for infield conversion to 208-240 volt and/or single to three phase with ease.
- Rinse Sentry – extends the cycle time to ensure 180°F final rinse.
- Built-in electric booster for 180°F final rinse water (standard 40°F or optional 70°F rise)
- Pumped drain
- Door safety switch
- Low-water tank heat protection
- Detergent and rinse aid pump
- Quiet double-wall construction
- Independent stainless steel interchangeable upper and lower wash and rinse arms
- Fresh water rinse
- Top mounted slide-out controls
- Stainless steel top and side panels
- 90-second total cycle time
- Extended wash for difficult ware cleaning & de-liming
- Automatic drain cycle
- 1 Hp motor
- Stainless steel construction

UH-170B

Undercounter High Temperature Dishwashing Machine with Built-in Booster Heater

UH-170 Model without Booster Heater

OPTIONS & ACCESSORIES

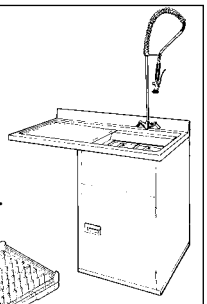

☐ **1-RDT Dish Table** Durable, heavy-gauge stainless steel dish table with sink, stand-pipe drain, removable scrap screen holder, drain-board, backsplash and lower storage cabinet. Sprayhose is optional. See 1-RDT catalog sheet. Specify right hand or left hand sink.

☐ **Additional Dish Racks**

☐ **17" Stand**
Stainless Steel

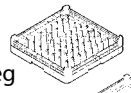

Peg

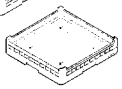

Flat

☐ **6" Leg Stand**

☐ **3 Phase Connection (prewired at factory)**

☐ **70°F Rise Booster**

☐ **UH170 without Booster**

☐ **1" Roller Kit (includes 4 casters)**

SPECIFIER STATEMENT

Specified unit will be Champion model UH-170B undercounter high temperature dishwashing machine with built-in booster heater.

Features 90 second total cycle, extended wash, analog controls, Rinse Sentry, detergent and rinse aid pump, top and side panels. Constructed of stainless steel. 1 year parts and labor warranty.

Champion Industries, Inc.
3765 Champion Blvd, Winston-Salem, NC 27105
Tel: 336/661-1556 Fax: 336/661-1979
www.championindustries.com

CH086
(1M) 9/10 Printed in U.S.A.

UH-170B UNDERCOUNTER

UH-170B

Undercounter High Temperature
Dishwashing Machine
with Built-in Booster Heater

Champion®
The Dishwashing Machine Specialists

Volume crated: 15 cu. ft.
Shipping weight crated: 215 lbs.

Dimensions shown in inches and [milimeters]

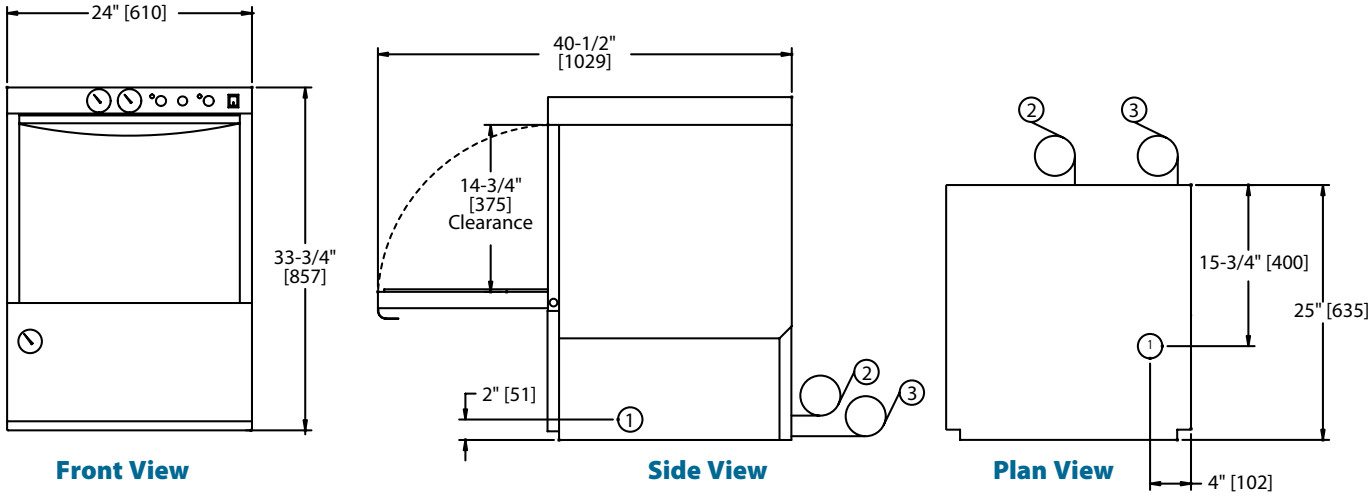

Front View Side View Plan View

Utilities

1	**Electrical** 208-240/60/1; 3 wire plus ground, (See Box). 208-240/60/3; 4 wire plus ground, (See Box). Field convertible to accept 3 phase power, see service manual for details
2	**Hot Water** 1/2" supply; 140°F Min. hot water connection for 40°F rise booster; 110°F Min. hot water connection for 70°F rise booster. Incoming supply pressure must maintain a Flow pressure 20-22 PSI (Pressure reducing valve, PRV, supplied by customer or may be purchased unmounted from Champion). Machine equipped with 3/4" hose connector.
3	**Pumped Drain** 5/8" I.D. flexible reinforced hose, 6 ft. long. Max. drain flow 15 US gpm. Max. drain height 3 ft.

UH-170B with 40°F/22°C Rise Booster

Elec. Specs.	Rated Amps	Minimum Supply Ckt. Conductor Ampacity	Maximum Overcurrent Protective Device
208/60/1	32	40	40
240/60/1	36	40	40
208/60/3	22	30	30
240/60/3	24	30	30

UH-170B with 70°F/39°C Rise Booster

Elec. Specs.	Rated Amps	Minimum Supply Ckt. Conductor Ampacity	Maximum Overcurrent Protective Device
208/60/1	45	60	60
240/60/1	50	60	60
208/60/3	29	35	35
240/60/3	33	40	40

Warning: Plumbing and electrical connections should be made by qualified personnel who will observe all the applicable plumbing, sanitary and safety codes and the National Electrical Code.

UH-170 without booster 750 watt tank heat

Elec. Specs.	Rated Amps
115/60/1	12

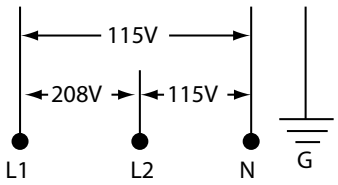

Note: Electrical supply service must be a 3-wire ground for connection shown.

SPECIFICATIONS

Capacities	
Cycle time (seconds)	90
Racks per hr. (NSF)	30
Motor horsepower	
Wash	1
Water consumption	
U.S. Gal. per hr. (Max. use)	28.2
U.S. Gal. per rack	.9
Temperatures °F	
Wash	150
Rinse	180
Heating	
Tank heat, electric, kW	2.0
Electric booster (kW) required for 40°F rise)	6
Electric booster (kW) required for 70°F rise)	9
Time Cycle in Seconds	
Wash	70
Rinse	15
Total cycle	90
Standard 20" x 20" Rack Complement	
Dish	1
Open	1

Due to an ongoing value analysis program at Champion, specifications contained in this catalog are subject to change without notice.
Champion Industries, Inc., 3765 Champion Blvd, Winston-Salem, NC 27105 • 336/661-1556 • Fax: 336/661-1979 • www.championindustries.com