Project:

Item Number:

Quantity:

CAYENNE® STANDARD-DUTY 10LB ELECTRIC FRYERS

40705

40707

Cayenne® Standard-Duty Electric Fryers

MODELS

40705	**Fryer 10 lb.**
40706	**Fryer 10 lb.**
40707	**Fryer, 2 x 10 lb.**
40708	**Fryer, 2 x 10 lb.**

FEATURES

- ❑ Dual unit provides increased volume and separation of food types to prevent flavor transfer from oil
- ❑ Ideal for small pubs, colleges, and product-specific applications
- ❑ Lift-out, one-piece stainless steel tank with carrying handles for easier cleaning
- ❑ Minimal footprint to accommodate tight counter spaces
- ❑ Thermostatically controlled to 375° F (190° C)
- ❑ Automatic thermal overload shutoff at 390° F (199° C) for safety
- ❑ Micro-switch shuts down unit for safety when element box is removed
- ❑ Quick heat-up and temperature recovery time between loads
- ❑ Nickel-plated steel wire basket with cool-touch handle
- ❑ "Power On" indicator light
- ❑ Non-skid rubber feet prevent slipping
- ❑ Ships with two baskets per unit

DESCRIPTION

Vollrath deep fat fryers are designed to create a delicious variety of crisp fried food with minimal fuss. Delight your customers with french fries, chicken, seafood, and more.

Agency Listings

NSF

Intertek

Due to continued product improvement, please consult www.vollrathco.com for current product specifications.

Approvals

Date:

Setting the Standard™

www.vollrathco.com

The Vollrath Company, L.L.C.
1236 North 18th Street
Sheboygan, WI 53081-3201 U.S.A.
Customer Service: 800.628.0830
Canada Customer Service: 800.695.8560
Main Fax: 800.752.5620 or 920.459.6573

Technical Services: 800.628.0832
Technical Services Fax: 920.459.6573

CAYENNE® STANDARD-DUTY 10LB ELECTRIC FRYERS

MODELS

40705 Fryer 10 lb.
40706 Fryer 10 lb.
40707 Fryer, 2 x 10 lb.
40708 Fryer, 2 x 10 lb.

DIMENSIONS

Dimensions shown in inches (cm).

10 Lb. Fryer

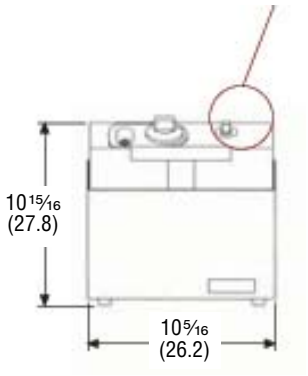

Front View

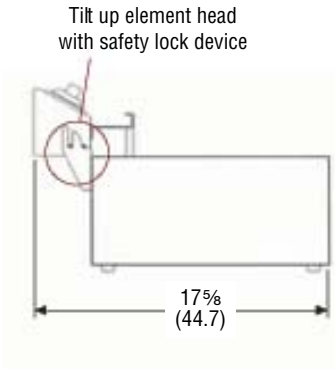

Side View

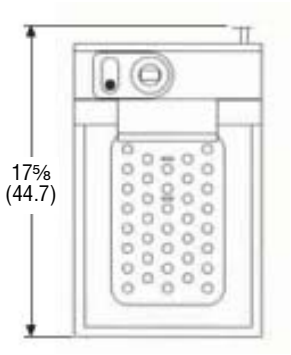

Top View

2 x 10 Lb. Fryer

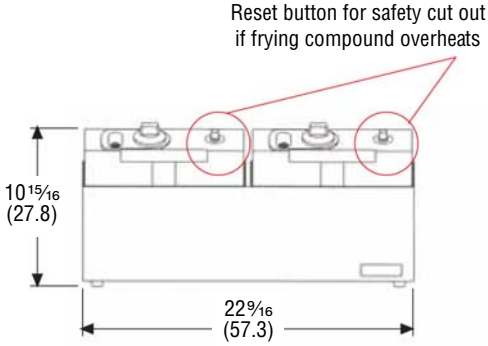

Front View

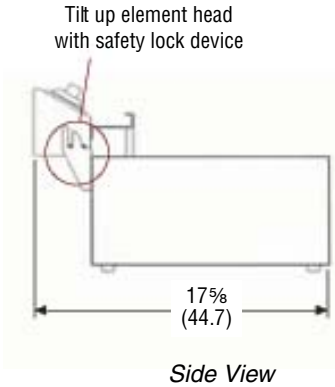

Side View

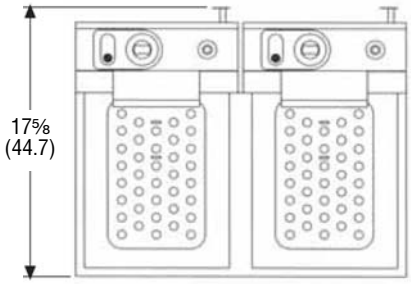

Top View

SPECIFICATIONS

Item	Number of Wells	Watts	Volts	Amps	Plug
40705	1	1800	120	15	5-15P
40706	1	2500	220	11.3	6-15P
40707	2	1800 per well	120	15 per well	5-15P
40708	2	2500 per well	220	11.3 per well	6-15P

Receptacles

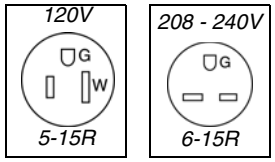

The Vollrath Company, L.L.C.
1236 North 18th Street
Sheboygan, WI 53081-3201 U.S.A.
Customer Service: 800.628.0830
Canada Customer Service: 800.695.8560
Main Fax: 800.752.5620 or 920.459.6573

Technical Services: 800.628.0832
Technical Services Fax: 920.459.6573

www.vollrathco.com

©2010 The Vollrath Company L.L.C.
Form Number L35742 4/10
Printed in USA