Project:

Item Number:

Quantity:

CAYENNE® 15LB MEDIUM-DUTY ELECTRIC FRYERS

40710

Cayenne® Medium-Duty Electric Fryers

MODELS

40709	**Fryer with Drain, 15 lb.**
40710	**Dual Fryer with Drain, 30 lb.**

DESCRIPTION

Vollrath deep fat fryers are designed to create a delicious variety of crisp fried food with minimal fuss. Delight your customers with french fries, chicken, seafood, and more.

FEATURES

- ❑ Ideal for restaurants, canteens, and fast food outlets
- ❑ Dual unit provides increased volume and separation of food types to prevent flavor transfer from oil
- ❑ Fully-welded oil tank with safety interlocked drainage valve for easy drainage and cleaning
- ❑ Minimal footprint to accommodate tight counter spaces
- ❑ Thermostatically controlled to 375° F (190° C)
- ❑ Automatic thermal overload shutoff at 390° F (199° C) for safety
- ❑ Internal micro-switch disconnects power when element box is removed
- ❑ Quick heat-up and temperature recovery time between loads
- ❑ Nickel-plated steel wire basket with cool-touch handle
- ❑ "Power On" indicator light
- ❑ Designed with cold zone
- ❑ Suitable for frozen product with excellent recovery time
- ❑ Non-skid rubber feet prevent slipping
- ❑ Includes night cover(s)
- ❑ Ships with two wire baskets per unit

Agency Listings

NSF

Intertek

Due to continued product improvement, please consult www.vollrathco.com for current product specifications.

Approvals

Date:

Setting the Standard™

www.vollrathco.com

The Vollrath Company, L.L.C.
1236 North 18th Street
Sheboygan, WI 53081-3201 U.S.A.
Customer Service: 800.628.0830
Canada Customer Service: 800.695.8560
Main Fax: 800.752.5620 or 920.459.6573

Technical Services: 800.628.0832
Technical Services Fax: 920.459.6573

CAYENNE® 15LB MEDIUM-DUTY ELECTRIC FRYERS

MODELS

40709 Fryer with Drain, 15 lb.
40710 Dual Fryer with Drain, 30 lb.

DIMENSIONS

Dimensions shown in inches (cm).

15 Lb. Fryer

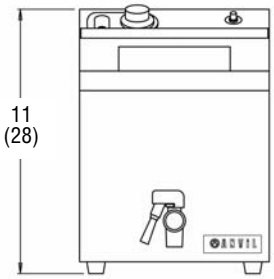

Front View

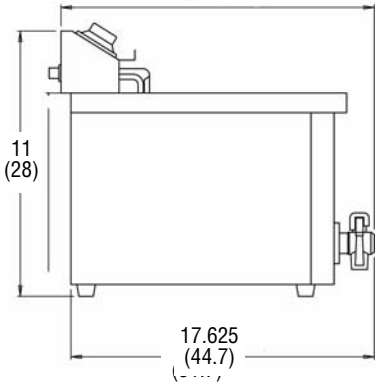

Side View

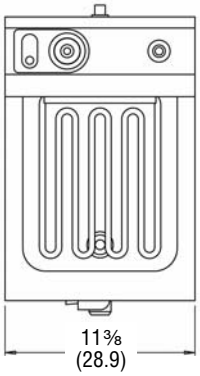

Top View

30 Lb. Fryer

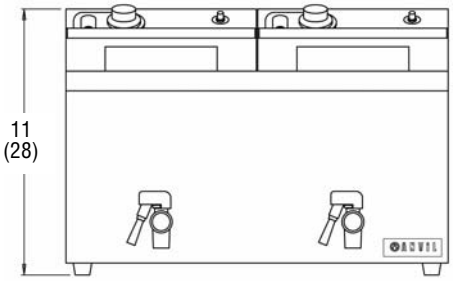

Front View

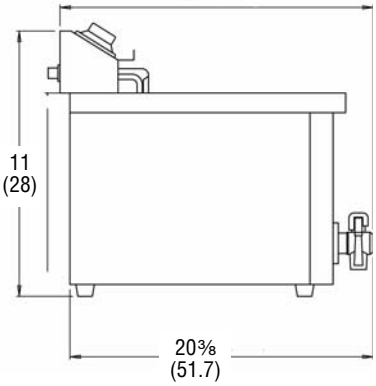

Side View

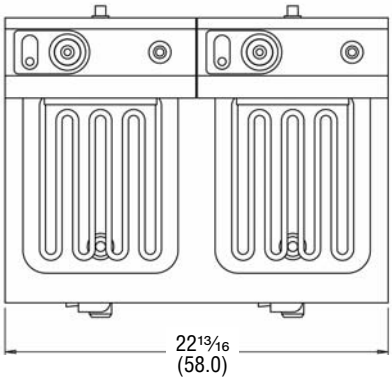

Top View

SPECIFICATIONS

Item	Number of Wells	Watts	Volts	Amps	Plug
40709	1	3000	220	13.6	6-15P
40710	2	3000 per well	220	13.6 per well	6-15P

Receptacles

208 - 240V

6-15R

The Vollrath Company, L.L.C.
1236 North 18th Street
Sheboygan, WI 53081-3201 U.S.A.
Customer Service: 800.628.0830
Canada Customer Service: 800.695.8560
Main Fax: 800.752.5620 or 920.459.6573

Technical Services: 800.628.0832
Technical Services Fax: 920.459.6573

www.vollrathco.com

©2010 The Vollrath Company L.L.C.
Form Number L35743 4/10
Printed in USA