PUMPS {STAINLESS STEEL} FOOD CONTAINER DISPENSERS

Models SS1 SS1L

Date: Project: Quantity: Item Number:

SS1 67580

SS1L 67590

NSF

THIN THICK PARTICULATE
See category tab for details.

Bid Description

The Single Stand dispenses from a manufacturer's #10 can, 1 gallon (3.8 L) jar or Stainless Steel Jar (94009). Shroud is stainless steel with a brushed (#4) finish to reduce the visibility of fingerprints.

The stainless steel pump within (67540) is constructed with a cast valve body featuring captured valve balls to prevent loss. A maximum portion of 1 ounce (30 mL) per stroke can be reduced in ⅛ ounce (3.7 mL) increments with supplied gauging collars.

For a lockable option, use SS1L (67590). This model includes a hasp so pump lid can be padlocked to base shroud. Padlock not included.

Standard Features

- Stainless steel construction
- Pump from your standard food container within
- 1 oz (30 mL) maximum portion, now adjustable in ⅛ oz (3.7 mL) increments — allows for Portion Optimization™
- Colored, engraved knob is available upon request (contact customer service for details)

Accessory Items

- ☐ Stainless Steel Jar 94009
- ☐ Storage Lid, Black Plastic 94008

Warranty

Server Products equipment is backed by a two-year limited warranty against defects in materials and workmanship. For our complete warranty statement, please see our website.

CAD Library

Individual CAD images can be downloaded from product pages on our website. We are also a member of The KCL CADalog with more than 100 other manufacturers. Our complete collection of CAD files can be purchased through Kochman Consultants, Ltd. at kclcad.com.

Specifications on reverse side

PUMPS {STAINLESS STEEL} FOOD CONTAINER DISPENSERS

Models SS1
SS1L

Single Stand Assembly
SS1 67580

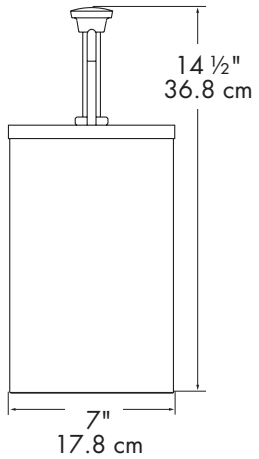

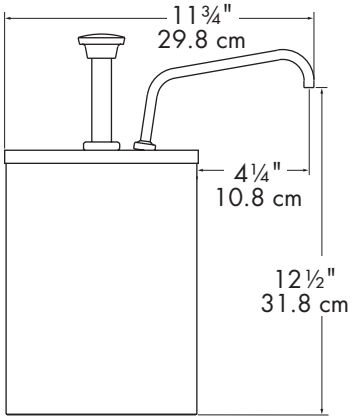

Specifications

Model	SS1 67580
Construction	Stainless steel base with a brushed (#4) finish. Includes a CPSS-F pump.
Capacity	Holds a #10 can, 3 qt (2.8 L) (94009) jar or 1gallon (3.8 L) jar.
Dimensions	Height / Width / Depth in: 14½ / 7 / 11¾ cm: 36.8 / 17.8 / 29.8
Weight	8 lb (3.6 kg)
Model	**SS1L 67590**
Construction	Includes hasp so pump can be padlocked (padlock not included).

FOB Richfield, Wisconsin 53076

Stainless Steel Pumps Quickly Pay For Themselves

Using a new Portion Optimization™ method, our stainless steel pumps can dispense what a menu item needs versus what standard equipment can provide. Currently, menus are created using the ¼ ounce portion increments standard pumps and ladles offer. However, simply by reducing the portion by ⅛ ounce can create significant savings. And more impressively, it doesn't have a perceivable change in the taste profile.

How Does Portion Optimization™ Work?

Our stainless steel pumps include a new gauging collar to allow the pump to dispense a smaller ⅛ ounce increment as well as the industry standard ¼ ounce incremental portions. This slightly smaller portion size pays for your equipment investment in a matter of months — and continues for the life of the pump.

ROI Example: Reduction Size .125 (⅛ oz)

Portion Size	*1 oz*	*⅞ oz*
Cost/Portion	*$0.10*	*$0.0875*
Portions/Day	*x 100*	*x 100*
Serving Days/Year	*360*	*360*
Annual Cost	*$3,600*	*$3,150*

$450.00
Annual Savings!

The really impressive numbers occur when you multiply this savings amount by the number of ingredients you want to control. This previously overlooked adjustment can suddenly make a huge difference!

Server Products, Inc. • P.O. Box 98 • Richfield, WI 53076 • Toll Free: 800-558-8722
P: 262-628-5600 • F: 262-628-5110 • spsales@server-products.com • server-products.com
Server Products, Inc. reserves the right to modify specifications without obligation. Printed in USA
11.2010 Stock #02005