PUMPS {STAINLESS STEEL} SERVING STATIONS

Model SS
SS-Compact

Date: Project: Quantity: Item Number:

SS 67000

SS-Compact 67730

NSF

THIN THICK PARTICULATE
See category tab for details.

Bid Description

Serving Stations have a stainless steel base with a brushed (#4) finish to reduce the visibility of fingerprints. Stainless steel pumps feature a cast valve body with captured valve balls to prevent loss. A maximum portion of 1 ounce (30 mL) per stroke can be reduced in ⅛ ounce (3.7 mL) increments with supplied gauging collars. Each include colored pump knobs: Red and Yellow.

Serving Station SS 67000 includes a CPSS-F 67540 pump on each end well that dispenses from a manufacturer's #10 can, 1 gallon (3.8 L) jar or Stainless Steel Jar (94009). Its center section holds (3) ⅙-size pans up to 6" (15.2 cm) deep and is covered by a clear hinged lid with stay-open/self-close settings. Pans sold separately.

Serving Station-Compact comes complete with (2) CP-⅙ 83400 pumps and (4) ⅙-size pans, 6" (15.2 cm) deep. Clear hinged lid covers front section with stay-open/self-close settings.

Standard Features

- Stainless steel construction with a brushed finish on base to reduce the visibility of fingerprints
- Clear hinged lid over pans has stay-open/self-close settings
- 1 oz (30 mL) maximum portion, now adjustable in ⅛ oz (3.7 mL) increments — allows for Portion Optimization™

Accessory Items

- ☐ Stainless Steel Jar 94009
- ☐ Storage Lid (for stainless steel jar) 94008
- ☐ ⅙-size steam table pan, 6" (15.2 cm) deep 90089
- ☐ ⅙-size steam table pan, 4" (10.2 cm) deep 90088
- ☐ ⅑-size steam table pan, 4" (10.2 cm) deep 90106

Two Year Warranty

Server Products equipment is backed by a two-year limited warranty against defects in materials and workmanship. For our complete warranty statement, please see our website.

Specifications on reverse side

PUMPS {STAINLESS STEEL} SERVING STATIONS

Models SS
SS-Compact

Serving Station SS 67000

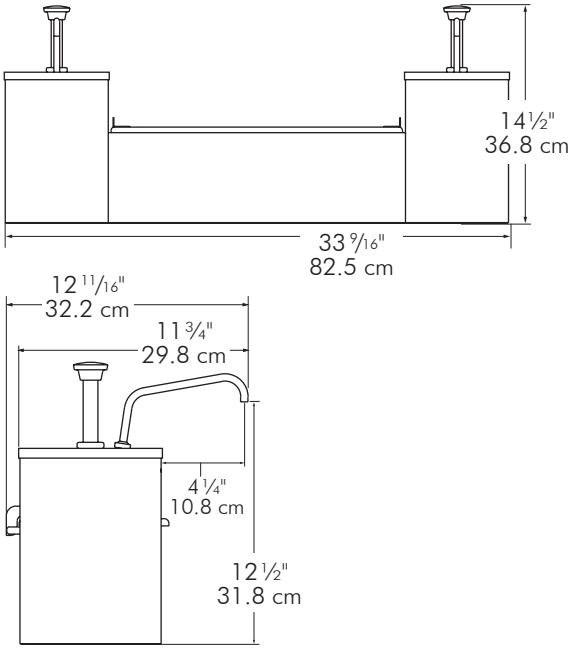

Serving Station-Compact 67730

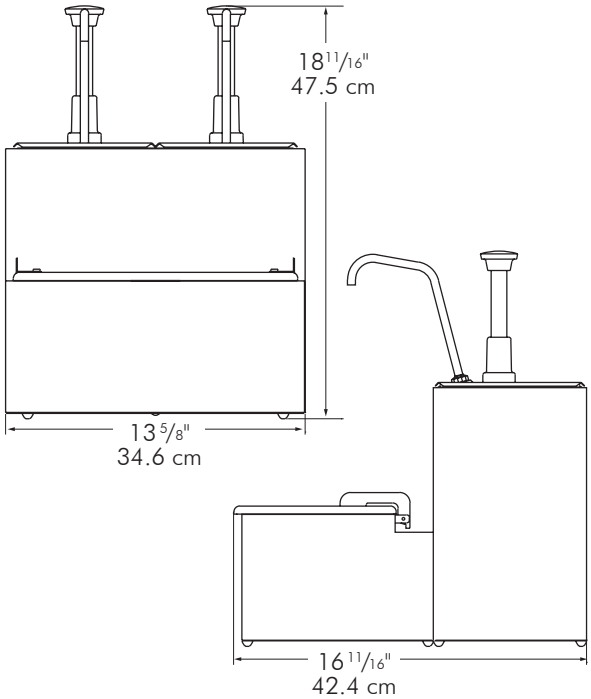

Specifications

Model	SS 67000
Construction	Stainless steel base with a brushed (#4) finish. Includes (2) stainless steel CPSS-F pumps and an acrylic hinged lid.
Capacity	Each end will holds a #10 can, 3 qt (2.8 L) jar (94009) or 1 gal (3.8 L) jar. Each 1/6-size, 6" (15.2 cm) deep pan holds 2.7 qt (2.6 L).
Dimensions	Height / Width / Depth in: 14 ½ / 33 9/16 / 12 11/16 cm: 36.8 / 85.2 / 32.2
Ship Weight	21 lb (12.2 kg)

Model	SS-Compact 67800
Construction	Stainless steel base with a brushed (#4) finish. Includes (2) CP-1/6 pumps, (4) 1/6-size pans and an acrylic hinged lid.
Capacity	Each 1/6-size, 6" (15.2 cm) deep pan holds 2.7 quarts (2.6 L).
Dimensions	Height / Width / Depth in: 18 11/16 / 13 5/8 / 16 11/16 cm: 47.5 / 34.6 / 42.4
Ship Weight	23 lb (10.4 kg)

FOB Richfield, Wisconsin 53076

CAD Library

Individual CAD images can be downloaded from product pages on our website. We are also a member of The KCL CADalog with more than 100 other manufacturers. Our complete collection of CAD files can be purchased through Kochman Consultants, Ltd. at kclcad.com.

Server Products, Inc. • P.O. Box 98 • Richfield, WI 53076 • Toll Free: 800-558-8722
P: 262-628-5600 • F: 262-628-5110 • spsales@server-products.com • server-products.com
Server Products, Inc. reserves the right to modify specifications without obligation. Printed in USA
11.2010 Stock 02112