PUMPS {POUCHED PRODUCT} EXPRESS™ MULTIPLES

Models SE-2, SE-2DI
SE-3, SE-3DI
SE-4, SE-4DI
SE-5, SE-5DI

Date: Project: Quantity: Item Number:

SET-DI 07050

SE-4 07200

NSF

THIN THICK PARTICULATE
See category tab for details.

Warranty

Server Products equipment is backed by a two-year limited warranty against defects in materials and workmanship. For a copy of our complete warranty statement, see our web site or contact us.

Bid Description

Server Express™ multiples are constructed of a brushed (#4) finish stainless steel base and lid with surgical-quality plastic pumps. Dispensing levers are black polypropylene.

Capacity is 1½ gallons (or 6 L) per pouch. Pumps yield 1 ounce (30 mL) per stroke with portion control to reduce the yield in ¼ ounce (7 mL) increments. Exclusively uses Cryovac® pouches with 16 mm fitment. The Server Express™ System achieves up to 98% evacuation.

Server Express™ Rails are available for countertop and drop-in applications with (2), (3), (4) or (5) pumps. Drop-in rails are assigned a "DI" suffix in the model name.

Standard Features

Pump several condiments from one space-saving unit

Holds 1½ gallon (or 6 L) Cryovac® pouches with fitment

New Server pump is constructed of surgical-quality plastic parts — quick to breakdown and completely dishwasher safe

Pump is ADA compliant, at ½ oz and ¼ oz portions, requiring less than 5 lbs of pressure to dispense

Maximum stroke yields 1 ounce (30 mL)

Easy-to-adjust portion control in ¼ ounce (7 mL) increments

Discharge tube fitting — **new** design works with ketchup, mustard and mayonnaise

Server Express™ Accessories

- ☐ Duckbill Discharge Fitting 07454
- ☐ Replacement Pump 07537
- ☐ Triple Drip Tray Assembly 07295
- ☐ Quad Drip Tray Assembly 07324
- ☐ Quintuple Drip Tray Assembly 07299

CAD Library

Individual CAD images can be downloaded from product pages on our web site. We are also a member of The KCL CADalog with more than 100 other manufacturers. Our complete collection of CAD files can be purchased through Kochman Consultants, Ltd. at kclcad.com.

Specifications on reverse side

PUMPS {POUCHED PRODUCT} EXPRESS™ MULTIPLES

Models SE-2, SE-2DI
SE-3, SE-3DI
SE-4, SE-4DI
SE-5, SE-5DI

Server Express™ — Countertop

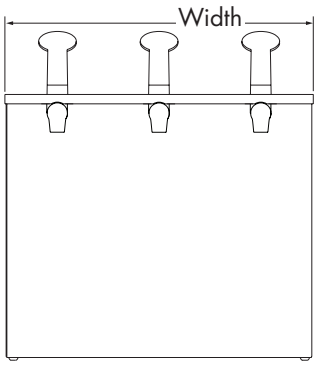

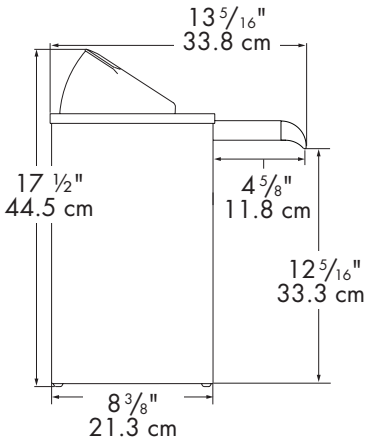

Server Express™ — Drop-In

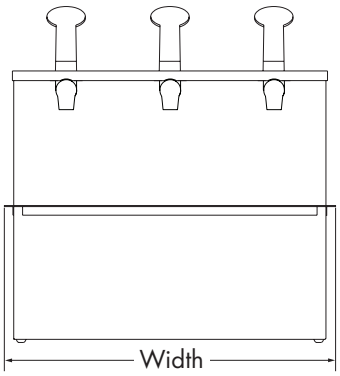

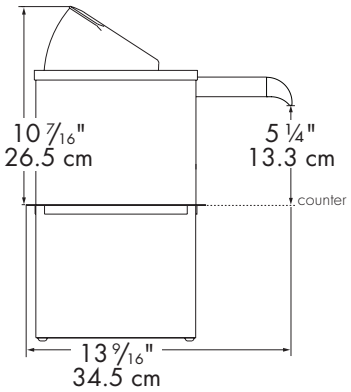

Specifications

Construction	Brushed finish stainless steel base and lid, surgical-quality plastic pumps and black polypropylene levers.
Capacity	1½ gallon (or 6 L) per pump section

Models		SE-2 07140	SE-3 07040	SE-4 07200	SE-5 07060
Height	in	17 ½	17 ½	17 ½	17 ½
	cm	44.5	44.5	44.5	44.5
Width	in	11	16 3/8	21 13/16	27 3/16
	cm	27.9	41.6	55.4	69.1
Depth	in	13 5/16	13 5/16	13 5/16	13 5/16
	cm	33.8	33.8	33.8	33.8
Weight	lb	15	18	22	34
	kg	6.8	8.2	9.8	15.4
Models		**SE-2DI 07160**	**SE-3DI 07050**	**SE-4DI 07210**	**SE-5DI 07070**
Height	in	10 7/16	10 7/16	10 7/16	10 7/16
	cm	26.5	26.5	26.5	26.5
Width	in	11 7/8	17 ¼	22 11/16	28 1/16
	cm	30.2	43.8	57.6	71.3
Depth	in	13 ¾	13 ¾	13 ¾	13 ¾
	cm	6.8	6.8	6.8	6.8
Weight	lb	15	19	22	34
	kg	6.8	8.6	9.8	15.4
Cutout Size		SE-2DI: 11" x 8½" (27.9 x 21.6 cm) SE-3DI: 16 3/8 x 8½" (41.6 x 21.6 cm) SE-4DI: 21 13/16 x 8½" (32.5 x 21.6 cm) SE-5DI: 27 3/16 x 8½" (69.1 x 21.6 cm)			

FOB Richfield, Wisconsin 53076

Cryovac© is a registered trademark and a trade name of Cryovac Inc.

Server Products, Inc. • P.O. Box 98 • Richfield, WI 53076 • Toll Free: 800-558-8722
P: 262-628-5600 • F: 262-628-5110 • spsales@server-products.com • server-products.com

Server Products, Inc. reserves the right to modify specifications without obligation. Printed in USA

4.10/1M Stock 02044