TOPPING STATIONS
INSULATED MINI BAR COMBOS

Models MB-2, MB-3 & MB-4

Date: Project: Quantity: Item Number:

MB-2 87470

MB-3 87290

MB-4 87480

Bid Description

Mini Bar combinations have an insulated base with stainless steel housing for countertop use. Each combination model includes multiples of the following components: black plastic 1/9-size jar, 6" (15.2 cm) deep, stainless steel hinged lid and 1 oz (30 mL) stainless steel ladle with a 6" handle.

Insulated Mini Bars can be iced or accept Round Eutectic Ice Pack(s) 94013 (purchased separately); MB-4 and MB-3 accept (2), MB-2 accepts (1).

Standard Features

- Stainless steel housing has a brushed finish to reduce the visibility of fingerprints
- Exclusive 1/9-size jars hold 1.9 quarts (1.8 L) each
- Clearly identify contents with colored, engraved lid knobs (furnished upon request)
- See Mini Bar Component Guide, to create your own combination for countertop or drop-in applications

Accessory Items

- ☐ 1/9-Size Jar, 3½" (8.9 cm), Black Plastic 87202
- ☐ Ladle, 4" (10.2 cm) Handle, Stainless Steel 82717
- ☐ 1/9-Size Jar, 6" (15.2 cm), Black Plastic 87203
- ☐ Ladle, 6" (15.2 cm) Handle, Stainless Steel 87213
- ☐ Eutectic Ice Pack, Round 94013

Two Year Warranty

Server Products equipment is backed by a two-year limited warranty against defects in materials and workmanship. For our complete warranty statement, please see our website.

CAD Library

Individual CAD images are available free of charge from our website. Our complete collection of CAD files, along with more than 100 other manufacturers, can be purchased through Kochman Consultants, Ltd. at kclcad.com.

Specifications on reverse side

TOPPING STATIONS
INSULATED MINI BAR COMBOS

Models MB-2, MB-3 & MB-4

Mini Bar Multiples

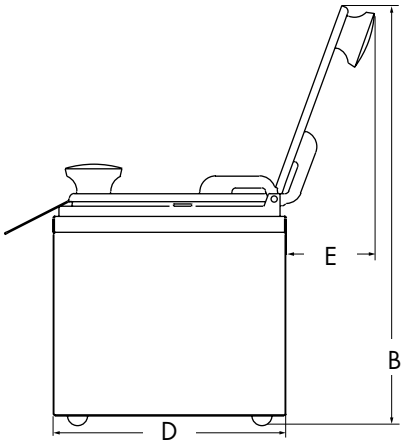

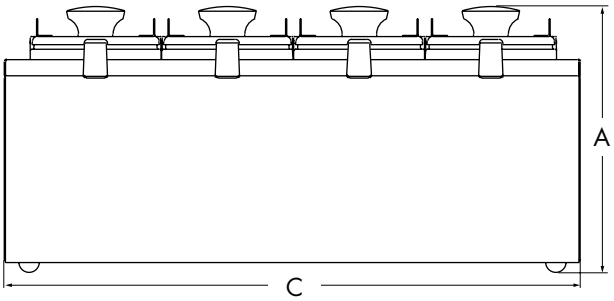

Specifications

Construction	Insulated base with stainless steel housing, black plastic 1/9-size jars, stainless steel lids and ladles
Capacity	1.9 qt (1.8 L) per jar

Model	MB-2 87470	MB-3 87290	MB-4 87480
A–Height	9 7/16" 24 cm	9 7/16" 24 cm	9 7/16" 24 cm
B–Height	14 3/16" 36 cm	14 3/16" 36 cm	14 3/16" 36 cm
C–Width	10" 25.4 cm	14 1/32" 35.6 cm	18 1/16" 45.9 cm
D–Depth	8 1/4" 21 cm	8 1/4" 21 cm	8 1/4" 21 cm
E–Depth	2 11/16" 6.8 cm	2 11/16" 6.8 cm	2 11/16" 6.8 cm
Weight Complete	6 lb 2.7 kg	8 lb 3.6 kg	10 lb 4.5 kg

FOB Richfield, Wisconsin 53076

Server Products, Inc. • P.O. Box 98 • Richfield, WI 53076 • Toll Free: 800-558-8722
P: 262-628-5600 • F: 262-628-5110 • spsales@server-products.com • server-products.com
Server Products, Inc. reserves the right to modify specifications without obligation. Printed in USA
1.2011 Stock 02108