TOPPING STATIONS
FOUNTAIN JAR RAILS, LADLE COMBO'S

Models SR-1 SR-2, SR-3 SR-4

Date: Project: Quantity: Item Number:

SR-2 80570

SR-3 80560

SR-4 80550

Bid Description

Constructed of stainless steel with a brushed (#4) finish. Non-insulated rail combinations hold shallow fountain jars in one compact countertop unit.

Ladle combinations come complete with shallow polypropylene fountain jars (82558), sanitary hinged lids (82545) and 1 oz (30 mL) ladles (82562).

Standard Features

Durable stainless steel with a brushed finish

Stainless steel hinged lid attaches to jar in a snap

Ladle slot in fountain jar allows lid to close completely

Colored, engraved knobs to identify flavors are also available

Rail Combinations

Choose a non-insulated rail for your countertop in (2), (3) or (4)-jar models. Jars lids and ladles are included.

Includes	Non-insulated Combo
(2) jars	SR-2 80570
(3) jars	SR-3 80560
(4) jars	SR-4 80550

Rail - Base Only

For a complete listing of options, see the Bar & Rail Accessories sheet. To put together your own combination, start with a base unit from the list below.

Accepts	Base Only
(1) jar	SR-1 84090
(2) jars	SR-2 82570
(3) jars	SR-3 82600
(4) jars	SR-4 82550

Specifications on reverse side

TOPPING STATIONS
FOUNTAIN JAR RAILS, LADLE COMBO'S

Models SR-1
SR-2, SR-3
SR-4

Syrup Rails

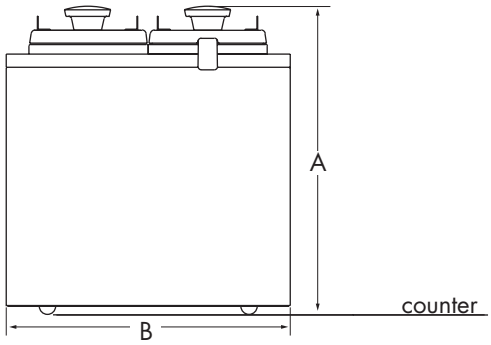

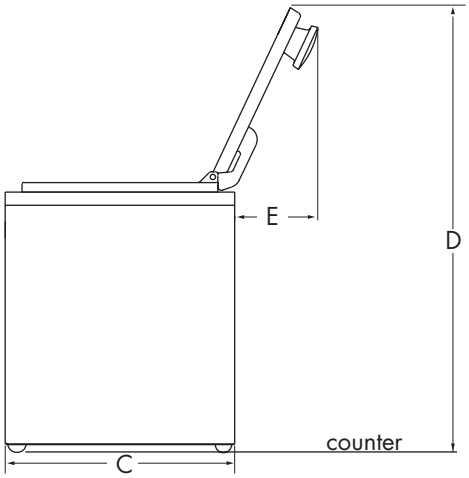

Specifications

Construction	Stainless steel with a brushed (#4) finish.
Jar Capacity	Shallow: 2 qt / 1.9 L; Deep: 3.5 qt / 3.3 L

Counter-Top		(1)-Jar	(2)-Jar	(3)-Jar	(4)-Jar
A–Height	in	11 13/16	11 13/16	11 13/16	11 13/16
	cm	30	30	30	30
B–Width	in	5 1/2	10 7/8	15 1/2	20 1/8
	cm	13.9	27.6	39.4	51.1
C–Depth	in	8 1/16	8 13/16	8 13/16	8 13/16
	cm	20.5	22.4	22.4	22.4
D–Lid (Height)	in	17 5/16	17 5/16	17 5/16	17 5/16
	cm	44	44	44	44
E–Lid (Depth)	in	3 9/16	3 3/16	3 3/16	3 3/16
	cm	9.1	8.1	8.1	8.1

FOB Richfield, Wisconsin 53076

CAD Library

Individual CAD images can be downloaded from product pages on our web site. We are also a member of The KCL CADalog with more than 100 other manufacturers. Our complete collection of CAD files can be purchased through Kochman Consultants, Ltd. at kclcad.com.

Warranty

Server Products equipment is backed by a two-year limited warranty against defects in materials and workmanship. For our complete warranty statement, see our web site or contact us.

Server Products, Inc. • P.O. Box 98 • Richfield, WI 53076 • Toll Free: 800-558-8722
P: 262-628-5600 • F: 262-628-5110 • spsales@server-products.com • server-products.com
Server Products, Inc. reserves the right to modify specifications without obligation. Printed in USA
10-2008/.1M Stock #02116