Model FSAF

FOOD WARMERS {MERCHANDISERS} POUCHED PRODUCT, ADVANTAGE™

Date: Project: Quantity: Item Number:

FSAF 85070

NSF C UL US LISTED

Warranty

Server Products equipment is backed by a two-year limited warranty against defects in materials and workmanship. For a copy of our complete warranty statement, see our web site or contact us.

Bid Description

The Food Server Advantage™ is designed to dispense fudge and caramel from a specialized Cryovac® pouch with fitment. Advantage™ units are constructed of a stainless steel enclosure with a brushed (#4) finish, ABS plastic lid and high-temperature molded top. Pump is stainless steel with welded construction. Includes Caramel and Fudge magnetic signs for merchandising.

An adjustable precalibrated thermostat controls twin heating elements cast in the food vessel. A third heating element is bonded to the aluminum paddle plates. The central paddle is located between (2) #10 pouches. A spout warmer keeps topping warm and ready inbetween servings.

Temperature settings are marked on the thermostat knob. Power is controlled with an ON/OFF rocker switch. An interlock switch cuts power to paddle when the lid is removed.

Capacity is (2) #10 Cryovac® pouches (3 qt, 2.8 L) with fitment. Pump valve features captured stainless steel balls. Maximum stroke yields 1 ounce (30 mL) with gauging collars supplied to reduce yield in 1/8 ounce (3.7 mL) increments.

Standard Features

Closed, sanitary system dispenses from (1) pouch while warming a second pouch to serving temperature

Outside of pump remains clean

Evacuation*: 96% fudge, 97% caramel

Pump design prevents loss of valve balls

1 oz (30 mL) maximum portion, now adjustable in 1/8 ounce (3.7 mL) increments — allows for Portion Optimization™

Magnetic merchandising signs attract attention

Food Server Advantage™ Accessories

- ☐ Cylinder-side cleaning brush 82049
- ☐ Spout-side/cast valve cleaning brush 82526

Specifications on reverse side

Model FSAF

FOOD WARMERS {MERCHANDISERS} POUCHED PRODUCT, ADVANTAGE™

Food Server Advantge™

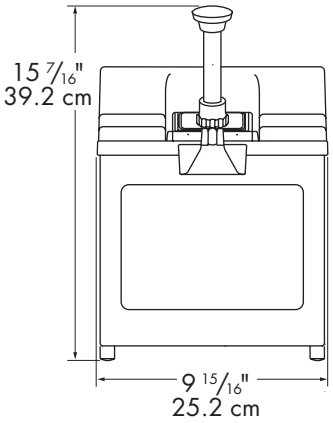

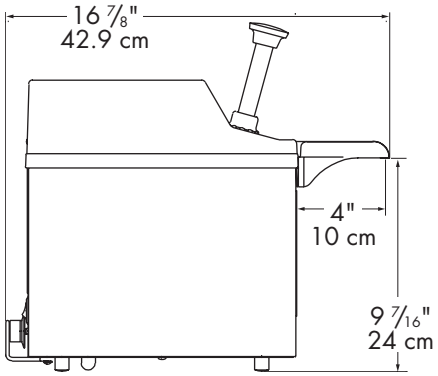

Specifications

Model	FSAF 85070 Fudge & Caramel ℞
Construction	Stainless steel enclosure, ABS plastic lid, and high-temperature molded top. Stainless steel pump with welded construction. Pump design prevents loss of valve balls. Includes magnetic Caramel & Fudge signs.
Capacity	(2) #10 pouches of 3 quarts each, 6 quart total (or 2.8 L each, 5.6 L total)
Dimensions	Height / Width / Depth in: 15 7/16 / 9 15/16 / 16 7/8 cm: 39.2 / 25.2 / 42.9
Electrical	120V, 60Hz, 450W, 3.8A 72 in (183 cm) cord set NEMA 5-15P, 15A, 125V PLUG
Weight	28 lb (12.7 kg)

Cryovac® is a registered trademark and a trade name of Cryovac Inc.

FOB Richfield, Wisconsin 53076

NSF Listed as a rethermalization unit to ensure food is quickly heated to a safe temperature before bacteria has an opportunity to grow. ℞

CAD Library

Individual CAD images can be downloaded from product pages on our web site. We are also a member of The KCL CADalog with more than 100 other manufacturers. Our complete collection of CAD files can be purchased through Kochman Consultants, Ltd. at kclcad.com.

* Test results on file

Server Products, Inc. • P.O. Box 98 • Richfield, WI 53076 • Toll Free: 800-558-8722
P: 262-628-5600 • F: 262-628-5110 • spsales@server-products.com • server-products.com
Server Products, Inc. reserves the right to modify specifications without obligation. Printed in USA
8.2009/1M Stock 02057