Models FS-20SS

FOOD WARMERS {FOOD SERVERS}
FULL PAN, SUPREME™

Date: Project: Quantity: Item Number:

FS-20SS 90080

FS-20SS 90020

NSF c UL US LISTED

Warranty

Server Products equipment is backed by a two-year limited warranty against defects in materials and workmanship. For a copy of our complete warranty statement, see our web site or contact us.

Bid Description

Server Supreme™ water bath warmers are constructed of stainless steel with a brushed (#4) finish. Their high powered heating element is controlled by an adjustable, precalibrated thermostat. Set thermostat by temperature settings. Each feature a "Power On" light, adjustable leveling legs and a water fill line.

The full-size Supreme's are 1500 watts, accept standard size food pans up to 12" x 20" (30.5 x 50.8 cm) and include a "Check Water" light. Pans not included. FS-20SS 90080 includes an adapter plate 90195 and (2) 7 qt (6.6 L) inset and lid assemblies; 90020 is without adapter plate and insets.

Standard Features

High wattage provides fast efficient heating

Full-size unit accepts up to a full-size pan for maximum flexibility

Adjustable precalibrated thermostat for accurate heat control

Water fill line eliminates overflow accidents

"Power On" indicator light for safety

Adjustable legs aid user in leveling unit on uneven surfaces

Inset lids stay upright during ladling and feature a rim that collects moisture and returns it to the food

Side handle assists in opening lid ergonomically—no reaching

Accessories

- ☐ 7 quart (6.6 L) Inset & Lid Assembly 84040
- ☐ 11 quart (10.4 L) Inset & Lid Assembly 84149
- ☐ Adapter Plate for (2) 7 quart (6.6 L) insets 90195

Specifications on reverse side

Models FS-20SS

FOOD WARMERS {FOOD SERVERS} FULL PAN, SUPREME™

Full-Size Warmer FS-20SS

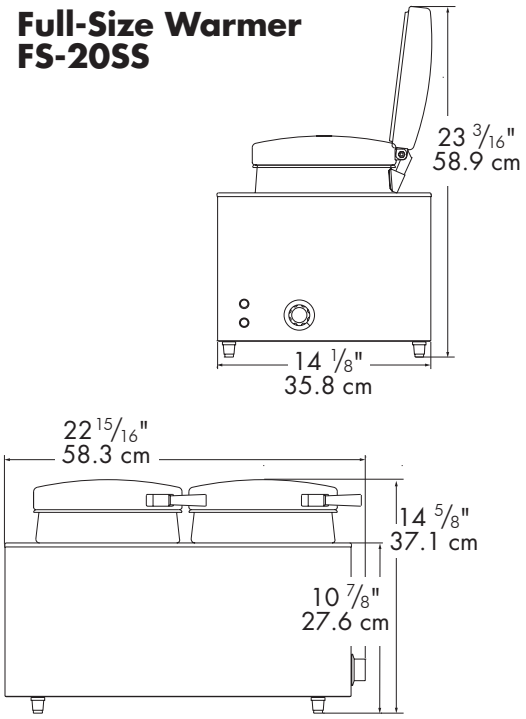

Specifications

Construction	FS-20SS is stainless steel with a brushed (#4) finish.
Capacity	FS-20SS 90020 accepts any combination of steam table pans to equal a full-size pan. FS-20SS 90080: (2) 7-qt (6.6 L) insets; 14 qt (13.2 L) total. FS-7SS 95170: 7 qt (6.6 L). FS-11SS 85190: 11 qt (10.4 L)
Electrical	120V, 60Hz, 72" (183 cm) cord set NEMA 5-15P, 15A, 125V PLUG

Models		FS-20SS 90020	FS-20SS 90080
Height	in	10 7/8	14 5/8
	cm	27.6	37.1
Overall Height	in	N/A	23 3/16
	cm		58.9
Width	in	14 1/8	14 1/8
	cm	35.8	35.8
Depth	in	22 15/16	22 15/16
	cm	58.3	58.3
Electrical		1500W 12.5A	1500W 12.5A
Weight		34 lb 15.4 kg	42 lb 19.1 kg

FOB Richfield, Wisconsin 53076

CAD Library

Individual CAD images can be downloaded from product pages on our web site. We are also a member of The KCL CADalog with more than 100 other manufacturers. Our complete collection of CAD files can be purchased through Kochman Consultants, Ltd. at kclcad.com.

Server Products, Inc. • P.O. Box 98 • Richfield, WI 53076 • Toll Free: 800-558-8722
P: 262-628-5600 • F: 262-628-5110 • spsales@server-products.com • server-products.com
Server Products, Inc. reserves the right to modify specifications without obligation. Printed in USA
10-2008/.1M Stock #02056