Item No. _____
Quantity _____

BEVERAGE-AIR

3779 Champion Blvd., Winston-Salem, NC 27105
1-888-845-9800 Fax# 1-336-245-6453
http://www.Beverage-Air.com

Commercial Refrigeration Equipment
General Specification

TOP MOUNTED REACH-IN FREEZERS
HORIZON SERIES
GLASS AND HALF-GLASS DOORS

MODELS:
HF
HFP
HFS
HFPS

18 Month
Parts/Labor Warranty—5 Year Compressor

CABINET CONSTRUCTION

- Exterior—Stainless steel exterior front with glass door(s) and gray painted sides standard (Additional exterior finish options available—see right).
- Interior—Anodized aluminum interior with coved corners standard.
- Insulation—2" foamed-in-place CFC and HCFC-free polyurethane insulation.

ELECTRONIC CONTROL

- Electronic thermostat with manual defrost button provides a digital display of cabinet temperatures, which includes status indicators and key pad for any necessary temperature adjustments.

REFRIGERATION SYSTEM

- Top mount balanced refrigeration system with evaporator positioned out of the food zone to maximize capacity.
- Automatic evaporation system for energy efficiency.
- Unique down draft airflow system ensures uniform distribution of airflow throughout the entire cabinet to ensure even product temperatures; maintains product temperatures at or near 0°F.
- Factory engineered, self-contained refrigeration system uses environmentally friendly (CFC and HCFC-free) R404A refrigerant.
- Automatic defrost system is fully automatic, time-initiated and temperature terminated operation.

DOORS

- Choose from glass door or half-glass door configuration.
- Triple pane heated glass doors.
- Anti-microbial door handles are standard.
- Doors with cam lift hinges standard. Positive seal self-closing door(s) with 120° stay open feature.
- Plug-in magnetic door gaskets of one piece construction, removable without tools for ease of cleaning.

SHELVING

- Three (3) heavy duty epoxy coated wire shelves per section standard. Four (4) shelf clips included per shelf (field installed).
- Shelves are adjustable in ½" increments. Four (4) interior pan slide kits available for field installation (see catalog).

MODEL FEATURES

- Vertical fluorescent interior lighting.
- 6" heavy-duty casters included, two with brakes. HFPS Spec Series standard with 6" legs.
- Cord and plug pre-wired – 115/60/1 phase.
  Freezers powered by 115/208-230 volts are designed for field wiring (requires 4-wire electrical circuit, hard-wired).
- Epoxy coated evaporator to eliminate the potential of corrosion.
- UL-EPH and CUL for open food product

1 Great Design, 4 Finish Options:

- **HF Standard Series:** S/S front, gray painted sides, aluminum interior
- **HFP Series:** S/S front, S/S sides, aluminum interior
- **HFS Series:** S/S front, gray painted sides, s/s interior
- **HFPS Spec Series:** Complete S/S exterior and interior

HF1/HFP1/ HFS1/HFPS1-1HG

HF2/HFP2/ HFS2/HFPS2-1HG

HF3/HFP3/ HFS3/HFPS3-5G

Available From:

***Note**: Not all markings may apply to all model variations.

Model Specified	_____	**Store#**	_____
Location	_____	**Quantity**	_____

BEVERAGE-AIR

Top Mount, Horizon Series Freezers

Models: HF, HFP, HFS, HFPS

(-G) Glass Door Models, (-HG) Half-Glass Door Models

DOOR TYPE	HF STANDARD S/S Front, Gray Painted Sides, Aluminum Interior	HFP S/S Front, S/S Sides, Aluminum Interior	HFS S/S Front, Gray Painted Sides, S/S Interior	HFPS Complete Stainless Exterior and Interior	DOORS & SHELVES
GLASS (-G)	HF1-1G	HFP1-1G	HFS1-1G	HFPS1-1G	1 Door & 3 Shelves
	HF1W-1G	HFP1W-1G	HFS1W-1G	HFPS1W-1G	1 Door & 3 Shelves
	HF2-1G	HFP2-1G	HFS2-1G	HFPS2-1G	2 Doors & 6 Shelves
	HF3-5G	HFP3-5G	HFS3-5G	HFPS3-5G	3 Doors & 9 Shelves
HALF-GLASS (-HG)	HF1-1HG	HFP1-1HG	HFS1-1HG	HFPS1-1HG	2 Doors & 3 Shelves
	HF2-1HG	HFP2-1HG	HFS2-1HG	HFPS2-1HG	4 Doors & 6 Shelves
	HF3-5HG	HFP3-5HG	HFS3-5HG	HFPS3-5HG	6 Doors & 9 Shelves

COMMON FEATURES

MODEL	HF1/HFP1/ HFS1/HFPS1 1 Section *Glass/Half Glass*	HF2/HFP2/ HFS2/HFPS2 2 Section *Glass/Half Glass*	HF3/HFP3/ HFS3/HFPS3 3 Section *Glass/Half Glass*
EXTERNAL DIMENSIONAL DATA			
Length Overall (inches) / (mm)	26" / 660	52" / 1321	78" / 1981
Depth Overall (inches) / (mm) *Add 1 3/4" for handle*	32" / 813	32" / 813	32" / 813
Height Overall— (inches) / (mm) *Add 6" for legs or casters*	78 1/2" / 1994	78 1/2" / 1994	78 1/2" / 1994
Depth with Door Open 90 °	54"	54"	54"
INTERNAL DIMENSIONAL DATA			
NET Capacity (cubic ft.) / (Liters)	24 / 680	49 / 1388	74 / 2096
Internal Length Overall (inches) / (mm)	22" / 559	48" / 1219	73 1/2" / 1867
Internal Depth Overall (inches) / (mm)	28" / 711	28" / 711	28" / 711
Height Overall— (inches) / (mm)	60" / 1524	60" / 1524	60" / 1524
ELECTRICAL DATA			
Full Load Amperes 115/60/1	7.1	16	208-230 / 16A
REFRIGERATION DATA			
Horsepower	3/4	1	1 1/2
WEIGHT DATA			
Gross Weight (Crated lbs)	377	727	873
Gross Weight (Crated kg)	171	330	396

For total depth add 1 3/4" for handle. For total height add 3" (casters only) or 6" (casters/legs.)

***Note:** Some refrigeration components may protrude beyond cabinet height by up to 1 1/2" - in some models.

***Note:** Freezers powered by 115/208-230 volts are designed for field wiring (requires 4-wire electrical circuit, hard-wired).

PLAN VIEWS

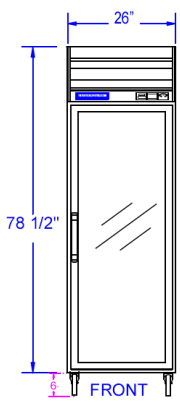

HF1/HFP1/ HFS1/HFPS1-1G

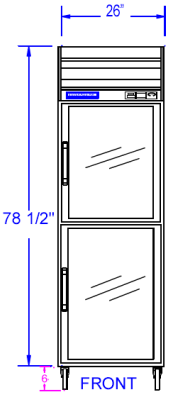

HF1/HFP1/ HFS1/HFPS1-1HG

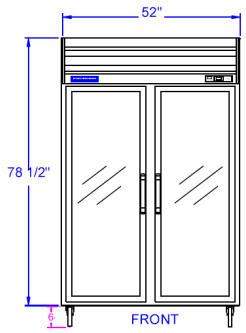

HF2/HFP2/ HFS2/HFPS2-1G

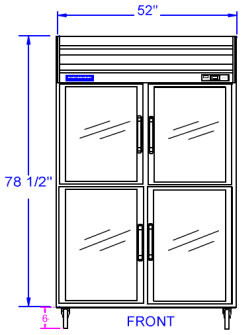

HF2/HFP2/ HFS2/HFPS2-1HG

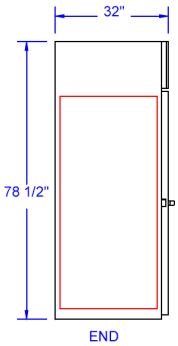

COMMON END

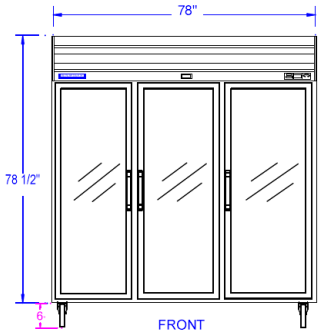

HF3/HFP3/ HFS3/HFPS3-5G

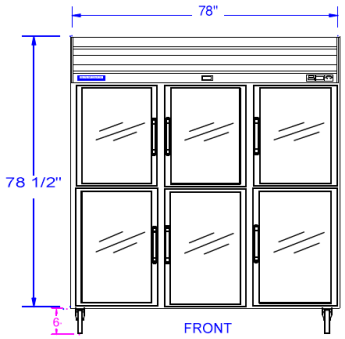

HF3/HFP3/ HFS3/HFPS3-5HG

BEVERAGE-AIR® CORPORATION

3779 Champion Blvd. • Winston-Salem, NC 27105 USA • (336) 245-6400 • Fax (336) 245-6453 • (888) 845-9800 • www.beverage-air.com

Specifications are subject to change without prior notice. 08/10

Tundra Specialties