Item No. _____
Quantity _____

BEVERAGE-AIR

3779 Champion Blvd., Winston-Salem, NC 27105
1-888-845-9800 Fax# 1-336-245-6453
http://www.Beverage-Air.com

Commercial Refrigeration Equipment
General Specification

COUNTERCHILL MINI BLAST CHILLER/ FREEZER

MODEL: CF031AF

COUNTERCHILL SERIES—BLAST CHILLER/ FREEZER

To meet the growing demands for compact, professional equipment, Beverage-Air has created the CounterChill, the blast chiller and freezer that you can use to chill and freeze both cooked and uncooked food.

CABINET CONSTRUCTION

Monoblock construction with internal finish constructed of AISI-304, 18/10 and external finishing of Scotch-Brite satinated AISI-304, 18/10 stainless steel.

Insulation is CFC and HCFC-free, high density foamed polyurethane.

Cabinet features a core temperature probe to insert in the food.

Slot-in type shelve supports made of stainless steel, are easily adjustable without any tools to foster cleaning. Unit comes standard with 3 shelve supports to accommodate 3 pans (13” x 21”). Shelve supports are adjustable in 1.5” - 3” centers. Pans are not included.

REFRIGERATION

Ecological refrigerant R404A used. The evaporator with high ventilation ensures that the cooling system works with unbeatable efficiency. Manual defrost device works based on condensation evaporation system that does not require power, saving electric energy.

ELECTRICAL

Climatic class ST (ambient temperature + 38°C /100°F).
Power supply 115/120V/1phase/60 Hz.

CF031AF

SPECIAL FEATURES

- Compact construction
- Core probe
- Stainless in and out
- Manual defrost

5 YEAR COMPRESSOR WARRANTY USA

***Note**: Not all markings may apply to all model variations.

Available From:

Model Specified	_____	**Store#**	_____
Location	_____	**Quantity**	_____

BEVERAGE-AIR

Counterchill Mini Blast Chiller/Freezer
Model: CF031AF

MODEL	CF031AF
EXTERNAL DIMENSIONAL DATA	
Length Overall (inches) Length Overall (mm)	22.05” 560
Depth Overall (inches) Depth Overall (mm)	27.6 700
Height Overall— (inches) Height Overall— (mm)	20.47” 520
CAPACITY	
Chilling Cycle	194°F / 37°F
Chilling Capacity—90 minutes (lbs)	17.6 lbs.
Freezing Cycle	194°F / 0°F
Freezing Capacity—240 minutes (lbs)	11 lbs.
Number of Pans (pans not included)	3
Pan Size—W x D (inches) Pan Size—W x D (mm)	13” x 21” 325 x 530
Distance Between Adjustable Tray Slides (inches) Distance Between Adjustable Tray Slides (mm)	* 1.5” - 3” * 38 - 76.2
ELECTRICAL DATA	
Electric Power Supply	115-120/1/60
Input Electric Power	1010 W
Max Absorbed Current	9.9 A
WEIGHT DATA	
Gross Weight (Crated lbs)	104
Gross Weight (Crated kg)	47

*** Note**: Included shelve supports are easily adjustable in 1.5” - 3” centers.

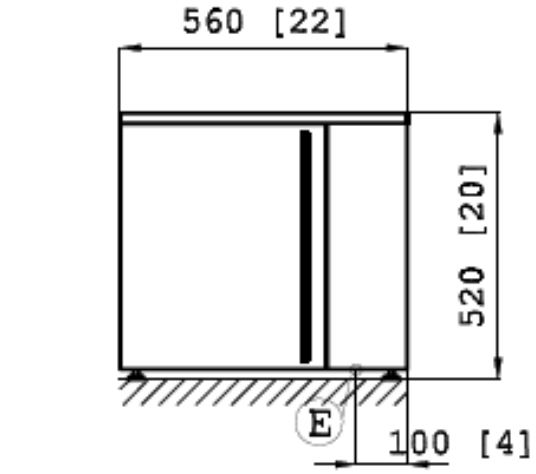

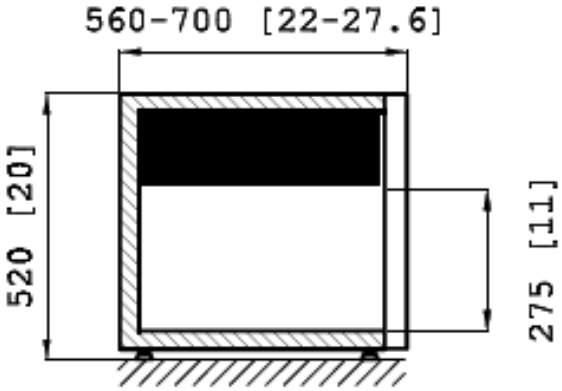

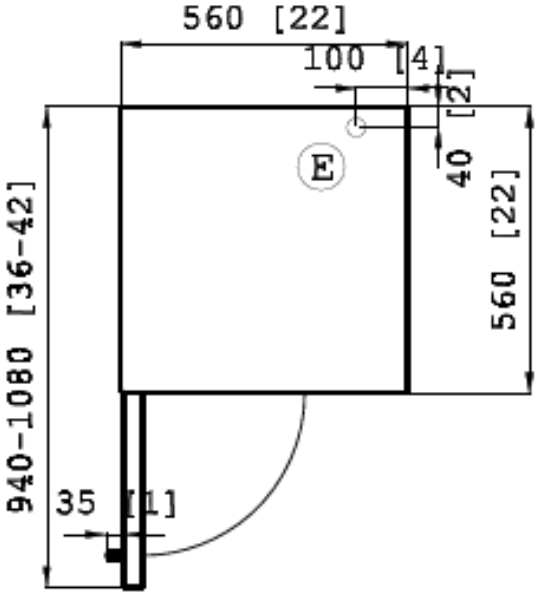

BEVERAGE-AIR® CORPORATION

3779 Champion Blvd. • Winston-Salem, NC 27105 USA • (336) 245-6400 • Fax (336) 245-6453 • (888) 845-9800 • www.beverage-air.com

Specifications are subject to change without prior notice. 12/10

Tundra Specialties