Item No. _____
Quantity _____

# BEVERAGE-AIR

3779 Champion Blvd., Winston-Salem, NC 27105
1-888-845-9800 Fax# 1-336-245-6453
http://www.Beverage-Air.com

**Commercial Refrigeration Equipment**
**General Specification**

## BOTTOM MOUNTED REACH-IN & PASS-THRU REFRIGERATORS
**RI18 SERIES**

**MODELS:**
**RI18-HGS**
**RID18-HGS**

### CABINET CONSTRUCTION
Heavy-duty construction includes stainless front (doors and grilles). Exterior sides are stainless steel. Exterior top, back and bottom are stainless steel. Cabinet includes interior thermometer and interior fluorescent light.

Two shelves per door section standard.

Foamed-in-place CFC and HCFC-free polyurethane insulation enhances the structural strength of the cabinet and helps increase energy efficiency.

RI18 models feature (1) “half-size glass door” and (1) “half-size solid door.” RID18 Pass-Thru models feature (1) “half-size glass door” and (1) “half-size solid door” per side. Doors attach to cabinet on cam-lift hinges. Hinges permit doors to stay open at 120° and gravity self-close. A plug-in type, vinyl magnetic gasket is attached to each door. Three-inch heavy-duty casters included, two with brakes standard.

### REFRIGERATION
Balanced refrigeration system is located at bottom of cabinet. System uses R134a refrigerant, which is CFC and HCFC-free for compliance with environmental safety concerns.

### SPECIAL FEATURES
- RI18 models feature (1) “half-size glass door” and (1) “half-size solid door.”
- RID18 Pass-Thru models feature (1) “half-size glass door” and (1) “half-size solid door” per side.
- 3” casters included, two with brakes standard.

**RI18-HGS**

*Note: Not all markings may apply to all model variations.

Available From:

| | | | |
|---|---|---|---|
| **Model Specified** | _____ | **Store#** | _____ |
| **Location** | _____ | **Quantity** | _____ |

BEVERAGE-AIR

# Bottom Mount, RI18 Series Refrigerators

## Models: RI18-HGS, RID18-HGS

| MODEL | RI18-HGS | RID18-HGS |
|---|---|---|
| **EXTERNAL DIMENSIONAL DATA** | | |
| Length Overall (inches)<br>Length Overall (mm) | 27 1/4”<br>692 | 27 1/4”<br>692 |
| Depth Overall—(inches) less handle<br>Depth Overall—(mm) less handle | 27 1/2”<br>699 | 29 1/2”<br>749 |
| Height Overall— (inches) less casters<br>Height Overall— (mm) less casters | 69 1/4”<br>1759 | 69 1/4”<br>1759 |
| Number of doors | 2 | 4 |
| **INTERNAL DIMENSIONAL DATA** | | |
| NET Capacity (cubic ft.)<br>NET Capacity (Liters) | 18<br>510 | 18<br>510 |
| Internal Length Overall (inches)<br>Internal Length Overall (mm) | 24”<br>610 | 24”<br>610 |
| Internal Depth Overall (inches)<br>Internal Depth Overall (mm) | 24”<br>610 | 24”<br>610 |
| Internal Height Overall (inches)<br>Internal Height Overall (mm) | 46 1/2”<br>1181 | 46 1/2”<br>1181 |
| Number of shelves | 4 | 4 |
| **ELECTRICAL DATA** | | |
| Full Load Amperes 115/60/1 | 5.9 | 5.9 |
| **REFRIGERATION DATA** | | |
| Horsepower | 1/4 | 1/4 |
| **WEIGHT DATA** | | |
| Gross Weight (Crated lbs) | 339 | 339 |
| Gross Weight (Crated kg) | 154 | 154 |

***Note**: Not all markings may apply to all model variations.

## PLAN VIEWS

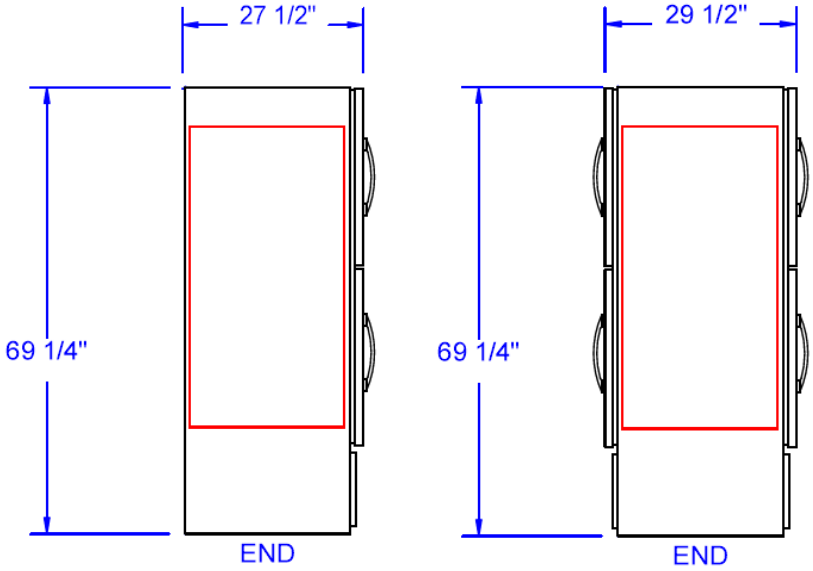


RI18-HGS RID18-HGS

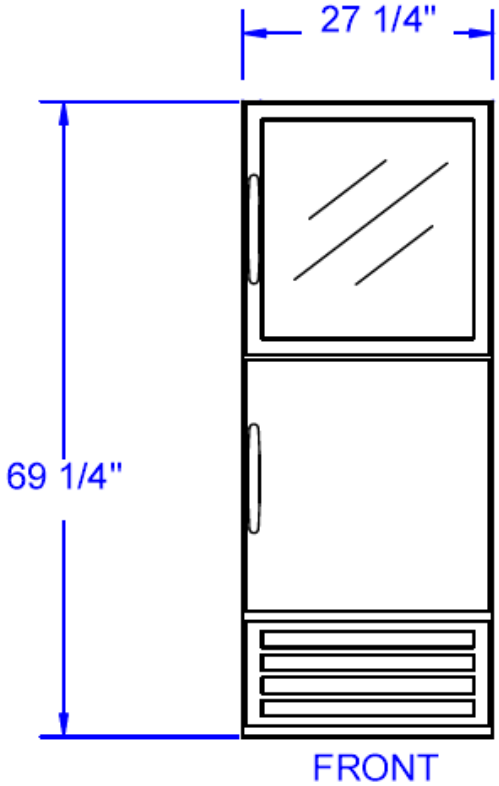


RI18-HGS/RID18-HGS

## ELECTRICAL CONNECTION

Units pre-wired at factory and include 8’ long cord and plug set.

115/60/1
NEMA-5-15P


**BEVERAGE-AIR® CORPORATION**

3779 Champion Blvd. • Winston-Salem, NC 27105 USA • (336) 245-6400 • Fax (336) 245-6453 • (888) 845-9800 • www.beverage-air.com



Specifications are subject to change without prior notice. 06/10

Tundra Specialties