Item No. _____
Quantity _____

BEVERAGE-AIR

3779 Champion Blvd., Winston-Salem, NC 27105
1-888-845-9800 Fax# 1-336-245-6453
http://www.Beverage-Air.com

Commercial Refrigeration Equipment
General Specification

BOTTOM MOUNTED REACH-IN FREEZERS

K SERIES
SOLID DOORS

MODELS:
KF24-1AS
KF48-1AS
KF74-5AS

CABINET CONSTRUCTION

Heavy-duty construction includes stainless front (doors and grilles). Exterior sides are steel with gray finish. Exterior top and back are galvanized steel. Interior bottom is stainless.

Interior of cabinet is constructed of white coated steel walls. Adjustable epoxy coated steel wire shelves are standard (3 per section).

Foamed-in-place CFC and HCFC-free polyurethane insulation enhances the structural strength of the cabinet and helps increase energy efficiency.

Doors attach to cabinet on cam-lift hinges. Hinges permit doors to stay open at 120° and gravity self-close. Snap-in magnetic gaskets for a positive seal are standard. Gaskets are easily removable for cleaning. Three-inch heavy-duty casters included, two with brakes standard.

REFRIGERATION

Balanced refrigeration system is located at bottom of cabinet. System uses R404A refrigerant, which is CFC and HCFC-free for compliance with environmental safety concerns. Defrosting is accomplished with electronic heaters. Defrost is time initiated, temperature terminated. A time termination is provided as a back up fail-safe. Evaporator fans are delayed from restarting until evaporator coil is adequately chilled down. Operation of compressor is governed by temperature control inside top of cabinet.

Enhanced digital control is located outside top of cabinet. Control includes "Door Open Indicator" and displays internal cabinet temperature. Internal cabinet temperature is fully adjustable using the digital control.

SPECIAL FEATURES

- Enhanced digital control adds function
- Stainless steel front (grilles and doors)

DIGITAL CONTROL

KF24-1AS

KF48-1AS

KF74-5AS

5 YEAR COMPRESSOR WARRANTY USA

***Note**: Not all markings may apply to all model variations.

Available From:

Model Specified	_____	**Store#**	_____
Location	_____	**Quantity**	_____

BEVERAGE-AIR

Bottom Mount, K Series Freezers

Models: KF24-1AS, KF48-1AS, KF74-5AS

MODEL	KF24-1AS	KF48-1AS	KF74-5AS
EXTERNAL DIMENSIONAL DATA			
Length Overall (inches) Length Overall (mm)	27” 686	54” 1372	82” 2083
Depth Overall— (inches) less handle Depth Overall—(mm) less handle	30” 762	30” 762	30” 762
Height Overall— (inches) less casters Height Overall— (mm) less casters	78” 1981	78” 1981	78” 1981
Number of doors	1	2	3
Depth with Door Open 90 °	56”	56”	56”
INTERNAL DIMENSIONAL DATA			
NET Capacity (cubic ft.) NET Capacity (Liters)	23 651	49 1388	72 2039
Internal Length Overall (inches) Internal Length Overall (mm)	23” 584	50 1/2” 1283	78” 1981
Internal Depth Overall (inches) Depth Overall (mm)	26” 660	26” 660	26” 660
Internal Height Overall (inches) Internal Height Overall (mm)	52” 1321	52” 1321	52” 1321
Number of shelves	3	6	9
ELECTRICAL DATA			
Voltage	115/60/1	115/60/1	208-230/1/60
Amps	8.7	10.5	10.5
REFRIGERATION DATA			
Horsepower	1/2	3/4	1
WEIGHT DATA			
Gross Weight (Crated lbs)	323	503	698
Gross Weight (Crated kg)	147	228	317

*Note: Not all markings may apply to all model variations.

ELECTRICAL CONNECTION

115/60/1
NEMA-5-15P

3-wire plug

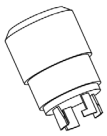

4-wire plug
NEMA L14-20P

PLAN VIEWS

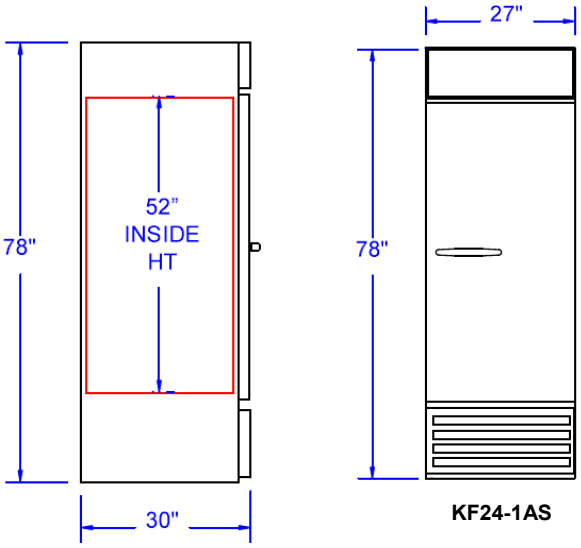

END

KF24-1AS

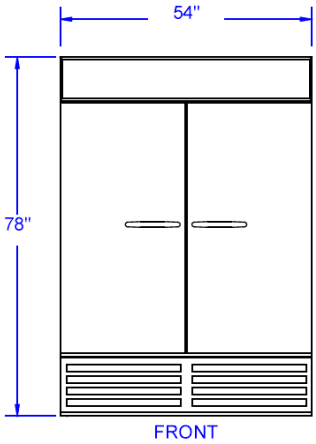

KF48-1AS

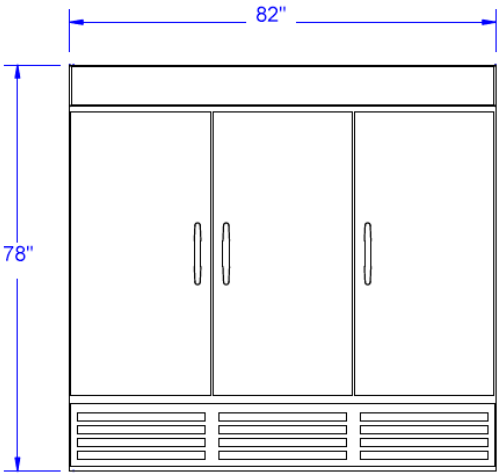

KF74-1AS

BEVERAGE-AIR® CORPORATION

3779 Champion Blvd. • Winston-Salem, NC 27105 USA • (336) 245-6400 • Fax (336) 245-6453 • (888) 845-9800 • www.beverage-air.com

Specifications are subject to change without prior notice. 12/10

Tundra Specialties