Item No. _____
Quantity _____

BEVERAGE-AIR

3779 Champion Blvd., Winston-Salem, NC 27105
1-888-845-9800 Fax# 1-336-245-6453
http://www.Beverage-Air.com

Commercial Refrigeration Equipment
General Specification

FOOD PREPARATION SERIES PREP TABLES

SPE27 ELITE SERIES
STANDARD TOP

MODELS:
SPE27A
SPE27B

SPE27 ELITE SERIES — STANDARD TOP

All around prep table with enhanced refrigeration system and new and improved grille system for better airflow and less temperature gradient. Improved design provides better airflow management and uniform temperature distribution throughout the cabinet. Pans are cooled from the bottom, eliminating the necessity of air blanket. Airflow assures that product in open containers is kept below 41°F and above freezing. This translates into increased product shelf life, higher quality food, better food appearance, fresher product and a reduction of bacteria build-up to combat food-borne illnesses.

CABINET CONSTRUCTION

Exterior construction includes heavy-duty stainless steel finish on front, sides, top, door(s) and grille. Removable hoods and insulated lid assemblies are made of matching stainless steel. Cabinet back and bottom are constructed of galvanized steel. Interior liner is made of anodized aluminum for superior resistance to corrosion.

Doors are mounted to face of cabinet on cartridge style hinges permitting them to self close under their own weight. Hinges also allow doors to stay open 120° and permit easy door removal for service and cleaning if required. A plug in type vinyl magnetic gasket is attached to each door for positive seal. Door handle is made from extruded aluminum with a black anodized finish. It is contoured to permit easy opening of doors with fingers from both top and bottom of handle.

Cabinet insulation is CFC free foamed-in-place polyurethane of two-inch minimum thickness. Six-inch casters, 2 with brakes, are standard. Legs are available as an option.

Cutting board supplied with cabinet is 10” wide constructed of high-density white polyethylene plastic. It is readily removable for cleaning. Two epoxy-coated steel wire shelves are supplied as standard. Pans furnished are 4” deep and made of polycarbonate plastic.

REFRIGERATION

More robust refrigeration system provides added capacity and efficiency. Systems are designed using CFC free R134a refrigerant and capillary tube between condenser and evaporator. Recirculated, forced air from evaporator is moved under pans, which are recessed 2” from top of cabinet. Forced air over the condenser is drawn through grille under door as well as the back and bottom of cabinet. Automatic condensate evaporator is provided to eliminate the need of floor drains.

SPE27

ELECTRICAL CONNECTION

Units pre-wired at factory and include 8’ long cord and plug

115/60/1
NEMA-5-15P

Available From:

Model Specified	_____	**Store#**	_____
Location	_____	**Quantity**	_____

BEVERAGE-AIR

Food Preparation Table — Standard Top
Models: SPE27A, SPE27B

MODEL	SPE27A	SPE27B
EXTERNAL DIMENSIONAL DATA		
Length Overall (inches) Length Overall (mm)	27” 686	27” 686
Depth Overall (inches) Depth Overall (mm)	31” 787	31” 787
Height Overall— (inches) Height Overall— (mm)	41 11/16” 1059	41 11/16” 1059
Number of doors	1	1
Depth with Door Open 90 °	55 1/8”	55 1/8”
Clear Door Opening (inches)	22 1/2” x 21 1/2”	22 1/2” x 21
INTERNAL DIMENSIONAL DATA		
NET Capacity (cubic ft.) NET Capacity (Liters)	7.3 207	7.3 207
Internal Length Overall (inches) Internal Length Overall (mm)	23 1/16” 586	23 1/16” 586
Internal Depth Overall (inches) Internal Depth Overall (mm)	19” 483	19” 483
Internal Height Overall—(inches) Internal Height Overall—(mm)	23” 584	23” 584
Number of shelves	2	2
Number of pans	6 1/6 size & 2 1/9 size	8 1/6 size
ELECTRICAL DATA		
Full Load Amperes 115/60/1	4	4
ENERGY CONSUMPTION (KWH)	-	-
REFRIGERATION DATA		
Horsepower	1/6	1/6
WEIGHT DATA		
Gross Weight (Crated lbs)	202	202
Gross Weight (Crated kg)	92	92

PAN CONFIGURATION

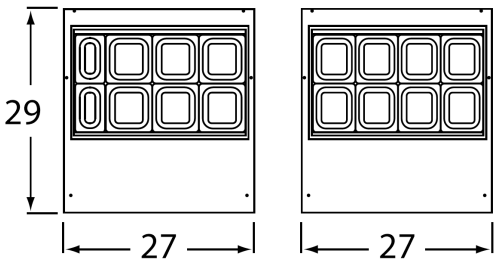

PLAN VIEWS

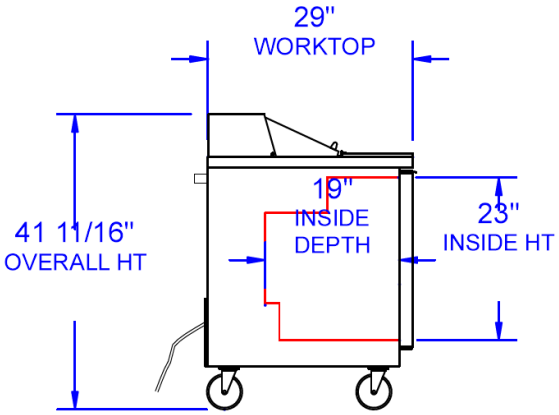

END VIEW

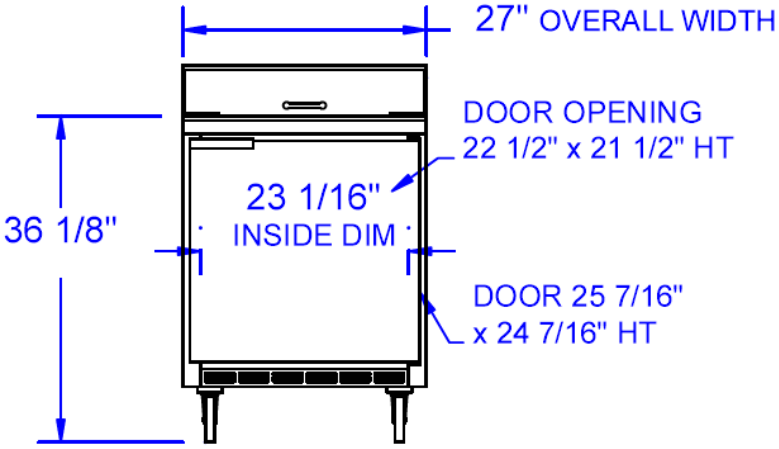

FRONT VIEW

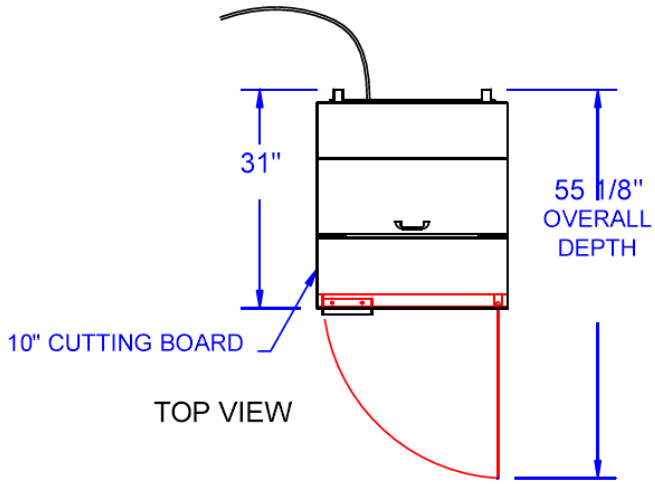

TOP VIEW

BEVERAGE-AIR® CORPORATION
3779 Champion Blvd. • Winston-Salem, NC 27105 USA • (336) 245-6400 • Fax (336) 245-6453 • (888) 845-9800 • www.beverage-air.com

Specifications are subject to change without prior notice. 06/10
Tundra Specialties