Item No. _____
Quantity _____

BEVERAGE-AIR

3779 Champion Blvd., Winston-Salem, NC 27105
1-888-845-9800 Fax# 1-336-245-6453
http://www.Beverage-Air.com

Commercial Refrigeration Equipment
General Specification

FOOD PREPARATION SERIES PREP TABLES

SPE ELITE SERIES
WITH SNEEZE GUARD
CONDIMENT STATIONS

MODELS:
SPE27-B-SNZ
SPE48-12-SNZ

SPE ELITE SERIES — Condiment Stations

All around prep table series with enhanced refrigeration system and new and improved grille system for better airflow and less temperature gradient. Improved design envelops cold air around pans and provides uniform temperature distribution throughout the cabinet. Airflow assures that product in open containers is kept below 41°F and above freezing. This translates into increased product shelf life, higher quality food, better food appearance, fresher product and a reduction of bacteria build-up to combat food-borne illnesses.

CABINET CONSTRUCTION

Exterior construction includes heavy-duty stainless steel finish on front, sides, top, door(s), back and grille. Sneeze guard assembly constructed of stainless steel and clear plastic.

Doors (cabinet front only) are mounted to face of cabinet on cartridge style hinges permitting them to self close. Hinges also allow doors to stay open 120°. A plug in type vinyl magnetic gasket is attached to each door for positive seal. Door handle is made from extruded aluminum with a black anodized finish. It is contoured to permit easy opening of doors with fingers from both top and bottom of handle. Digital thermometer on door to monitor interior cabinet temperature.

Cabinet insulation is CFC and HCFC-free foamed-in-place polyurethane of two-inch minimum thickness.

Six-inch adjustable legs are standard. Six-inch casters and three-inch ADA compliant casters are available.

Dual-sided countertop is constructed of stainless steel for added durability. SPE27-B-SNZ will accommodate 8-1/6th size pans. SPE48-12-SNZ will accommodate 12-1/6th size pans. Pans furnished are 4” deep and made of polycarbonate plastic and are centered for service on both sides of unit *(will accommodate up to 6” deep food service pans—not included).*

Two epoxy-coated steel wire shelves per door section supplied as standard.

REFRIGERATION

More robust refrigeration system provides added capacity and efficiency. Systems are designed using CFC free R134a refrigerant and capillary tube between condenser and evaporator. Recirculated, forced air from evaporator is moved under pans, which are recessed 2” from top of cabinet. Forced air over the condenser is drawn through grille under door as well as the back and bottom of cabinet. Automatic condensate evaporator is provided to eliminate the need of floor drains.

CERTIFICATIONS

Designed and tested in 86°F ambient to 2009 NSF/ANSI 7 standard to hold food product below 41°F. Food must be pre-chilled before placing into pans. Approvals: UL-EPH, NSF7 for Open Buffets, and Canadian (CSA).

Optional Night Covers Available For Condiment Stations

SPE27-B-SNZ
(SHOWN WITH OPTIONAL 6” LEGS)

SPE48-12-SNZ
(SHOWN WITH STANDARD 6” CASTERS)

ELECTRICAL CONNECTION

115/60/1
NEMA-5-15P

Units pre-wired at factory and include 8’ long cord and plug set located at rear, bottom left.

Model Specified	_____	**Store#**	_____
Location	_____	**Quantity**	_____

BEVERAGE-AIR

Food Preparation Table
Models: SPE27-B-SNZ, SPE48-12-SNZ

MODEL	SPE27-B-SNZ	SPE48-12-SNZ
EXTERNAL DIMENSIONAL DATA		
Length Overall (inches) / (mm) *Includes overall sneeze guard*	27 5/8" / 702	48 5/8" / 1235
Depth Overall (inches) / (mm) *Includes door and handle*	30 1/8" / 765	30 1/8" / 765
Height Overall (inches) / (mm)	53 1/8" / 1349	53 1/8" / 1349
Working Height (inches) / (mm)	35 5/8" / 905	35 5/8" / 905
Number of doors	1	2
Depth with Door Open 90 °	55 1/8"	55 1/8"
Clear Door Opening (inches)	22 1/2" x 21 1/2"	22 1/2" x 21 1/2"
INTERNAL DIMENSIONAL DATA		
NET Capacity (cubic ft.) NET Capacity (Liters)	7.3 207	13.9 394
Number of shelves	2	4
ELECTRICAL DATA		
Full Load Amperes 115/60/1	4.0	5.0
REFRIGERATION DATA		
Horsepower	1/6	1/4
WEIGHT DATA		
Gross Weight (Crated lbs)	202	309
Gross Weight (Crated kg)	92	140

PLAN VIEWS

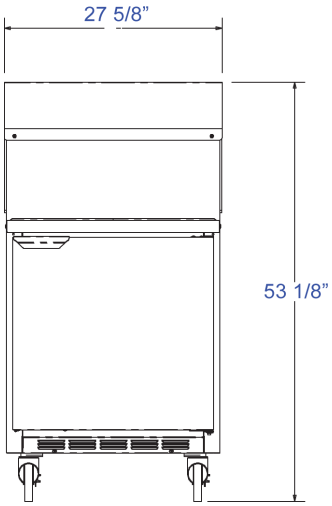

SPE27-B-SNZ FRONT VIEW

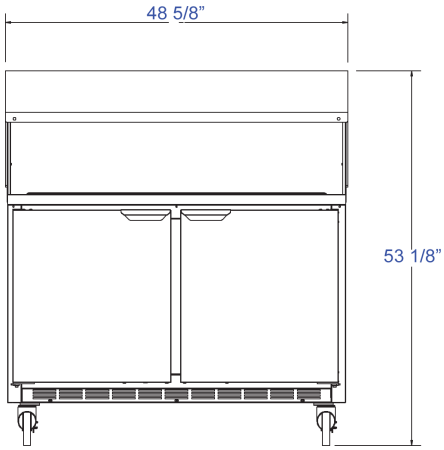

SPE48-12-SNZ FRONT VIEW

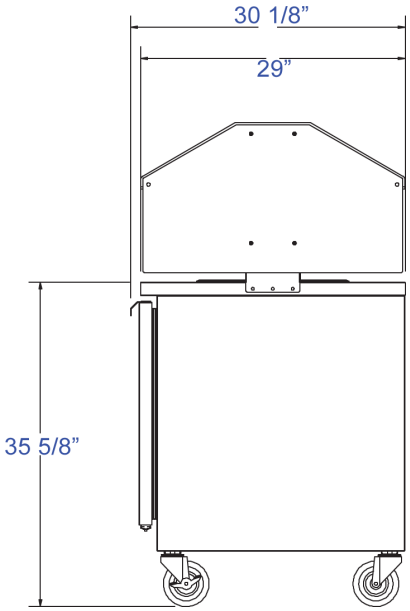

COMMON END VIEW

PAN CONFIGURATION

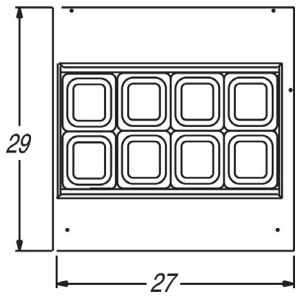

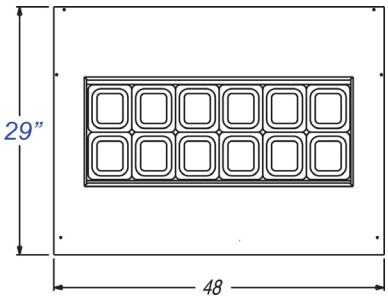

BEVERAGE-AIR® CORPORATION

3779 Champion Blvd. • Winston-Salem, NC 27105 USA • (336) 245-6400 • Fax (336) 245-6453 • (888) 845-9800 • www.beverage-air.com

Specifications are subject to change without prior notice. 03/11

Tundra Specialties